INSTRUCTION MANUAL

Power Line Super Multi-Meter

SQLC-11OL

[1φ2W / 1φ3W / 3φ3W Analog Output]

Hardware Model G

DAIICHI ELECTRONICS CO., LTD.

Introduction

Thank you for your purchase of our product.
Read this instruction manual carefully before installation, wiring, and using this product.
Keep this instruction manual handy for reference at any time.
Have a contact with us or sales agent in case that this instruction manual is lost or damaged.

<Caution>

Have a contact with us when you have any questions or are aware of missing article.

Safety precaution

In the operation manual, the harm to a user or other persons and damage of property were prevented, and the important matter for using correctly safely is written in it.
Please read a text well after understanding the following contents (a display and a graphic symbol), and protect the mentioned item.

⚠DANGER	Improper use may lead to death or severe injury.
⚠WARNING	Improper use may possibly lead to death or severe injury.
⚠ATTENTION	Improper use may lead to medium injury.

- ■ We are not responsible for the damage caused by following condition (earthquake / fire which is not caused by us, action by third party, other accident, damage caused by our customer, misuse, product usage under abnormal condition).
- ■ We are not responsible for secondary damage caused by product use / product malfunction(loss of profit, halt of business operation). We are also not responsible for damage caused by false operation in combination with connecting equipment which is beyond our control.

⚠DANGER

- ● Do not disassemble, remodel and repair this product.
  If judged as trouble, please contact our company or a distributing agent.
- ● Do not get this product wet to prevent generation of heat and ignition, product failure.
  When this product gets wet, stop using it.
- ● Metal (wire etc.) other than wiring is not connected to the terminal (metallic portion) of this product.
- ● Do not work, if combustibles, and an inflammable medicine and inflammable gas are in the circumference.

⚠WARNING

- ● Connect specified power supply.
  Connecting power supply beyond specification causes fire and product failure.
- ● When dust has adhered to the terminal, remove dust after turning off the power.
- ● Follow the below-mentioned procedure when abnormality (fuming / bad odor) happens.
  (1) Stop a power supply and input, and stop using.
  (2) Contact our company or a distributing agent.

⚠ATTENTION

- ● Do not use this product in a environment of high temperature / high humidity to prevent any damage.
- ● Do not touch the terminal during operation to prevent electric shock.
- ● Do not pull and bend connecting cable with force. Cable damage causes heat generation / burn and contact failure leads to equipment damage.
- ● Connection or inspection of apparatus are not performed by the wet hand.

Cautions on safety

Cautions on safe use

1. Working and storage environments

Don't mount or store this unit in the following environments. If the unit becomes defective due to the use in an environment other than specified, it may be repaired for pay even during its warranty period (one year after the date of delivery).

① Don't mount or store the unit at a place where the ambient temperature is other than a range of −10 to +55℃ or the relative humidity is higher than 85% RH.
② Don't mount or store the unit at a place where a corrosive gas such as SO_2, H_2S, etc. is generated.
Corrosive gas = Sulfur dioxide SO_2 / Hydrogen sulfide H_2S / etc.
Large current bus / saturable reactor / etc.
③ Don't mount or store the unit at a dusty place.
④ Don't mount or store the unit at a place subjected to noticeable vibrations or shocks.
⑤ Don't mount or store the unit at a place subjected to noticeable external noises.
⑥ If this unit directly measures an inverter output of cycle control, SCR phase angle control or PWM control, an error may increase due to its operation principle.

2. Cautions on use in an outdoor panel

Be careful with the following items when using this unit in an outdoor panel.

① Don't mount the unit at a place where it is directly exposed to rain or water drops, otherwise this unit may become defective because of no water-proof or drip-proof structure.
② Don't mount the unit at a dusty place.
③ Don't mount the unit at a place exposed to direct sunlight. Avoid exposing the unit to direct sunlight even through a glass window.
If the meter is directly exposed to sunlight, the surface temperature of the meter rises and the case may be deformed if the temperature exceeds 80℃.
④ If the average temperature around the meter exceeds 40℃, the life of the unit may shorten.

3. About dew condensation

If the temperature and humidity of an installation change rapidly when a product is a non-energization, the waterdrop by dew condensation may adhere to a display inner side. (The display filter and the LCD surface stick and the pattern of the shape of a circle or an ellipse occur.) This phenomenon is not trouble.
It will disappear, if a control power supply is applied and about 2 hour passes.

4. Mounting and wiring

Mount and connect the unit by a technician while referring to the instruction manual and observing the following cautions.

CAUTION	● Connect the unit after confirming the connection diagram. An improper connection may cause troubles such as the generation of a high voltage on the secondary side of its current transformer or burning of the unit or the occurrence of a fire. ● Don't perform any connection in a hot line without turning off the power supply in advance, otherwise an electric shock accident, troubles or burning of the unit, a fire, gas explosion, or other very dangerous accidents may occur. ● The terminal cover is mounted for preventing an electric shock accident. Mount the terminal cover without fail after the end of work.

5. Setting

This unit requires setting and confirmation of the measuring range, etc. before use.
Wrong setting, if any, causes malfunction of the unit. If setting should be wrong, neither measurement nor output becomes correct. Carefully read the instruction manual before setting the unit.

■ Default setting

The default setting values are as specified below at the delivery time. Set them according to the working conditions. The input circuit of this product is the common use of 3-phase 3-wire (3φ3W), single-phase 2-wire (1φ2W), and single-phase 3-wire (1φ3W). In case an input circuit is designated at the case of an order, it is shipped by the default value of the designated input circuit. And, in case it does not do designation of the input circuit (with no designation), it is shipped by the default value of 3-phase 3-wire.
The unit will be delivered with your specified setting values, if so specified.

① Voltage, current input (1/2)

No.	Setting item				3-phase 3-wire		Single-phase 3-wire	Single-phase	
					110V input	220V input		110V input	220V input
1	Display combination		Pattern		Pattern 1		Pattern 1	Pattern 1	
			Main monitor		A(L2)		A(L1)	A	
			Sub-monitor (Left)		V(L1L2)		V(L1N)	V	
			Sub-monitor (Center)		W		W	W	
			Sub-monitor (Right)		Wh		Wh	Wh	
			Bar graph		A(L2)		A(L1)	A	
2	Alarm output (1)	Alarm 1	Factor		DA		DA	DA	
			Reset form		AUTO		AUTO	AUTO	
			Contact delay time		0 second		0 second	0 second	
			Test		—		—	—	
		Alarm 2	Factor		DA		DA	DA	
			Reset form		AUTO		AUTO	AUTO	
			Contact delay time		0 second		0 second	0 second	
			Test		—		—	—	
3	Demand detection	Demand current	Upper limit value		80.0A		400A	40.0A	
			Interval		0 second		0 second	0 second	
		Demand active power	Upper limit value		OFF		OFF	OFF	
			Interval		0 second		0 second	0 second	
			Operation form		Operating system according with bimetallic type.		Operating system according with bimetallic type.	Operating system according with bimetallic type.	
			Power-factor operation form		Instant measurement		Instant measurement	Instant measurement	
4	Harmonic detection	Current	Distortion-factor upper limit		OFF		OFF	OFF	
			5th conversion content rate upper limit		OFF		OFF	OFF	
			n-th content rate	Factor	5th		5th	5th	
				Upper limit	OFF		OFF	OFF	
		Voltage	Distortion-factor upper limit		OFF		OFF	OFF	
			5th conversion content rate upper limit		OFF		OFF	OFF	
			n-th content rate	Factor	5th		5th	5th	
				Upper limit	OFF		OFF	OFF	
		5th conversion detection characteristics			Inverse-time-delay mode		Inverse-time-delay mode	Inverse-time-delay mode	
		Average value time limit			0 minute		0 minute	0 minute	
5	Instant measurement detection	Voltage upper limit value			OFF		OFF	OFF	
		Voltage lower limit value			OFF		OFF	OFF	
6	Leakage detection (1)	Rated sensitivity current			0.1A		0.1A	0.1A	
		Factor switching			Io		Io	Io	
		Circuit switching			1 phase earthing		1 phase earthing	1 phase earthing	
		Use ZCT selection			Type 0		Type 0	Type 0	
7	Backlight	Action			AUTO		AUTO	AUTO	
		Brightness			3 (Middle)		3 (Middle)	3 (Middle)	

Note(1) A setting item is not displayed in case there is no corresponding option.

① Voltage, current input (2/2)

No.	Setting item			3-phase 3-wire		Single-phase 3-wire	Single-phase	
				110V input	220V input		110V input	220V input
8	Measurement range	Voltage range		6600V	220V	110.0V	3300V	220V
		Current range		100.0A		500A	50.0A	
		Current display peculiar sensitivity		100.0A		500A	50.0A	
		Active power polarity		One-side swing		One-side swing	One-side swing	
		Active power range		1200kW	40.0kW	100.0kW	150.0kW	10.00kW
		Reactive power range		600kvar	20.00kvar	50.0kvar	75.0kvar	5.00kvar
		Power-factor range		LEAD 0.500 - 1.000 - LAG 0.500		LEAD 0.500 - 1.000 - LAG 0.500	LEAD 0.500 - 1.000 - LAG 0.500	
		Frequency range		45.0 - 65.0Hz		45.0 - 65.0Hz	45.0 - 65.0Hz	
9	Analog output (2)	Output factor 1		A(L2)		A(L1)	A	
		Output factor 2		V(L1L2)		V(L1N)	V	
		Output factor 3		W		W	W	
		Output factor 4		cos φ		cos φ	cos φ	
		Output peculiar sensitivity	Current	100.0%		100.0%	100.0%	
			Active power	100.0%		100.0%	100.0%	
			Reactive power	50.0%		50.0%	50.0%	
		Low input cut		OFF		OFF	OFF	
10	Pulse output (2)	Output 1	Factor	Wh		Wh	Wh	
			Pulse unit	10kWh/p	0.1kWh/p	1kWh/p	1kWh/p	0.1kWh/p
		Output 2	Factor	Wh		Wh	Wh	
			Pulse unit	10kWh/p	0.1kWh/p	1kWh/p	1kWh/p	0.1kWh/p
11	External operation input (2)	Input 1 function		Alarm reset		Alarm reset	Alarm reset	
		Input 2 function		Max./Min. reset		Max./Min. reset	Max./Min. reset	
12	Measurement display ON/OFF	Voltage		ON		ON	ON	
		Current		ON		ON	ON	
		Active power		ON		ON	ON	
		Reactive power		ON		ON	ON	
		Power-factor		ON		ON	ON	
		Frequency		ON		ON	ON	
		Watt-hour of power receiving		ON		ON	ON	
		Watt-hour of power transmission		ON		ON	ON	
		var-hour of power receiving		ON		ON	ON	
		var-hour of power transmission		ON		ON	ON	
		Harmonic current		ON		ON	ON	
		Harmonic voltage		ON		ON	ON	
		Current leakage (2)		ON		ON	ON	
13	Input circuit	Phase line change (4)		3φ3W		1φ3W (L1-N-L3)	1φ2W	
		Input voltage (5)		110V	220V	300V	110V	220V
14	Measurement	Dead band		0.0%		0.0%	0.0%	
		Tidal current measurement		General measurement		General measurement	General measurement	
15	Analog output specification (2)(3)			1 - 5V		1 - 5V	1 - 5V	
16	Analog output adjustment (2)	Output 1	Bias adjustment	0.0%		0.0%	0.0%	
			Span adjustment	100.0%		100.0%	100.0%	
		Output 2	Bias adjustment	0.0%		0.0%	0.0%	
			Span adjustment	100.0%		100.0%	100.0%	
		Output 3	Bias adjustment	0.0%		0.0%	0.0%	
			Span adjustment	100.0%		100.0%	100.0%	
		Output 4	Bias adjustment	0.0%		0.0%	0.0%	
			Span adjustment	100.0%		100.0%	100.0%	

Note(2) A setting item is not displayed in case there is no corresponding option.
The external operation input constitutes default value with an alarm-output option.
It becomes the next function in case there is no alarm-output option.
Input 1 function : Max. / Min. reset, Input 2 function : Measurement factor change.

Note(3) A setting item is not displayed if analog output is except DC0 - 5V (or DC1 - 5V) specification,
And analog output insulation product does not display a setting item.

Note(4) When the setting of phase line change of an input circuit is changed, it will return to the default value of phase line which all set value changed.

Note(5) When phase line change setting of an input circuit is set as 3φ3W (or 1φ2W) and the input voltage setting is changed, the voltage range returns to the default value of the phase line.
(For example : In case of 3φ3W, 6600V at the case of 110V setting, 300V at the case of 220V setting.)

② Current input

No.	Setting item				3-phase 3-wire	Single-phase 3-wire	Single-phase
1	Display combination		Pattern		Pattern 15	Pattern 15	Pattern 15
			Main monitor		A(L2)	A(L1)	A
			Sub-monitor (Left)		A(L1)	A(L3)	—
			Sub-monitor (Center)		A(L3)	A(N)	—
			Sub-monitor (Right)		—	—	—
			Bar graph		A(L2)	A(L1)	A
2	Alarm output (6)	Alarm 1	Factor		DA	DA	DA
			Reset form		AUTO	AUTO	AUTO
			Contact delay time		0 second	0 second	0 second
			Test		—	—	—
		Alarm 2	Factor		DA	DA	DA
			Reset form		AUTO	AUTO	AUTO
			Contact delay time		0 second	0 second	0 second
			Test		—	—	—
3	Demand detection	Demand current	Upper limit value		80.0A	400A	40.0A
			Interval		0 second	0 second	0 second
4	Harmonic detection	Current	Distortion-factor upper limit		OFF	OFF	OFF
			5th conversion content rate upper limit		OFF	OFF	OFF
			n-th content rate	Factor	5th	5th	5th
				Upper limit	OFF	OFF	OFF
		5th conversion detection characteristics			Inverse-time-delay mode	Inverse-time-delay mode	Inverse-time-delay mode
		Average value time limit			0 minute	0 minute	0 minute
5	Leakage detection (6)		Rated sensitivity current		0.1A	0.1A	0.1A
			Factor switching		Io	Io	Io
			Circuit switching		1 phase earthing	1 phase earthing	1 phase earthing
			Use ZCT selection		Type 0	Type 0	Type 0
6	Backlight		Action		AUTO	AUTO	AUTO
			Brightness		3 (Middle)	3 (Middle)	3 (Middle)
7	Measurement range		Current range		100.0A	500A	50.0A
			Current display peculiar sensitivity		100.0A	500A	50.0A
8	Analog output (6)		Output factor 1		A(L2)	A(L1)	A
			Output factor 2		A(L1)	A(L3)	—
			Output factor 3		A(L3)	A(N)	—
			Output factor 4		—	—	—
			Output peculiar sensitivity	Current	100.0%	100.0%	100.0%
			Low input cut		OFF	OFF	OFF
9	External operation input (6)		Input 1 function		Alarm reset	Alarm reset	Alarm reset
			Input 2 function		Max./Min. reset	Max./Min. reset	Max./Min. reset
10	Measurement display ON/OFF		Current		ON	ON	ON
			Harmonic current		ON	ON	ON
			Current leakage (6)		ON	ON	ON
11	Input circuit		Phase line change (8)		3φ3W	1φ3W (L1-N-L3)	1φ2W
12	Measurement		Dead band		0.0%	0.0%	0.0%
			Tidal current measurement		General measurement	General measurement	General measurement
13	Analog output specification (6)(7)				1 - 5V	1 - 5V	1 - 5V
14	Analog output adjustment (6)		Output 1	Bias adjustment	0.0%	0.0%	0.0%
				Span adjustment	100.0%	100.0%	100.0%
			Output 2	Bias adjustment	0.0%	0.0%	0.0%
				Span adjustment	100.0%	100.0%	100.0%
			Output 3	Bias adjustment	0.0%	0.0%	0.0%
				Span adjustment	100.0%	100.0%	100.0%
			Output 4	Bias adjustment	0.0%	0.0%	0.0%
				Span adjustment	100.0%	100.0%	100.0%

Note(6) A setting item is not displayed in case there is no corresponding option.
The external operation input constitutes default value with an alarm-output option.
It becomes the next function in case there is no alarm-output option.
Input 1 function : Max. / Min. reset, Input 2 function : Measurement factor change.

Note(7) A setting item is not displayed if analog output is except DC0-5V (or DC1-5V) specification,
And analog output insulation product does not display a setting item.

Note(8) When the setting of phase line change of an input circuit is changed, it will return to the default value of phase line which all set value changed.

③ Voltage input

No.	Setting item				3-phase 3-wire		Single-phase 3-wire	Single-phase	
					110V input	220V input		110V input	220V input
1	Display combination		Pattern		Pattern 16		Pattern 16	Pattern 16	
			Main monitor		V(L1L2)		V(L1N)	V	
			Sub-monitor (Left)		V(L2L3)		V(L3N)	—	
			Sub-monitor (Center)		V(L3L1)		V(L1L3)	—	
			Sub-monitor (Right)		Hz		Hz	Hz	
			Bar graph		V(L1L2)		V(L1N)	V	
2	Alarm output (9)	Alarm 1	Factor		V		V	V	
			Reset form		AUTO		AUTO	AUTO	
			Contact delay time		0 second		0 second	0 second	
			Test		—		—	—	
		Alarm 2	Factor		V		V	V	
			Reset form		AUTO		AUTO	AUTO	
			Contact delay time		0 second		0 second	0 second	
			Test		—		—	—	
3	Harmonic detection	Voltage	Distortion-factor upper limit		OFF		OFF	OFF	
			5th conversion content rate upper limit		OFF		OFF	OFF	
			n-th content rate	Factor	5th		5th	5th	
				Upper limit	OFF		OFF	OFF	
		5th conversion detection characteristics			Inverse-time-delay mode		Inverse-time-delay mode	Inverse-time-delay mode	
		Average value time limit			0 minute		0 minute	0 minute	
4	Instant measurement detection	Voltage upper limit value			OFF		OFF	OFF	
		Voltage lower limit value			OFF		OFF	OFF	
5	Leakage detection (9)	Rated sensitivity current			0.1A		0.1A	0.1A	
		Factor switching			Io		Io	Io	
		Circuit switching			1 phase earthing		1 phase earthing	1 phase earthing	
		Use ZCT selection			Type 0		Type 0	Type 0	
6	Backlight	Action			AUTO		AUTO	AUTO	
		Brightness			3 (Middle)		3 (Middle)	3 (Middle)	
7	Measurement range	Voltage range			6600V	220V	110.0V	3300V	220V
		Frequency range			45.0 - 65.0Hz		45.0 - 65.0Hz	45.0 - 65.0Hz	
8	Analog output (9)	Output factor 1			V(L1L2)		V(L1N)	V	
		Output factor 2			V(L2L3)		V(L3N)	—	
		Output factor 3			V(L3L1)		V(L1L3)	—	
		Output factor 4			Hz		Hz	Hz	
		Low input cut			OFF		OFF	OFF	
9	External operation input (9)	Input 1 function			Alarm reset		Alarm reset	Alarm reset	
		Input 2 function			Max./Min. reset		Max./Min. reset	Max./Min. reset	
10	Measurement display ON/OFF	Voltage			ON		ON	ON	
		Frequency			ON		ON	ON	
		Harmonic voltage			ON		ON	ON	
		Current leakage (9)			ON		ON	ON	
11	Input circuit	Phase line change (11)			3φ3W		1φ3W (L1-N-L3)	1φ2W	
		Input voltage (12)			110V	220V	300V	110V	220V
12	Measurement	Dead band			0.0%		0.0%	0.0%	
		Tidal current measurement			General measurement		General measurement	General measurement	
15	Analog output specification (9)(10)				1 - 5V		1 - 5V	1 - 5V	
16	Analog output adjustment (9)	Output 1	Bias adjustment		0.0%		0.0%	0.0%	
			Span adjustment		100.0%		100.0%	100.0%	
		Output 2	Bias adjustment		0.0%		0.0%	0.0%	
			Span adjustment		100.0%		100.0%	100.0%	
		Output 3	Bias adjustment		0.0%		0.0%	0.0%	
			Span adjustment		100.0%		100.0%	100.0%	
		Output 4	Bias adjustment		0.0%		0.0%	0.0%	
			Span adjustment		100.0%		100.0%	100.0%	

Note(9) A setting item is not displayed in case there is no corresponding option.
The external operation input constitutes default value with an alarm-output option.
It becomes the next function in case there is no alarm-output option. Input 1 function : Max. / Min. reset, Input 2 function : Measurement factor change.

Note(10) A setting item is not displayed if analog output is except DC0-5V (or DC1-5V) specification, And analog output insulation product does not display a setting item.

Note(11) When the setting of phase line change of an input circuit is changed, it will return to the default value of phase line which all set value changed.

Note(12) When phase line change setting of an input circuit is set as 3φ3W (or 1φ2W) and the input voltage setting is changed, the voltage range returns to the default value of the phase line.
(For example : In case of 3φ3W, 6600V at the case of 110V setting, 300V at the case of 220V setting.)

6. Operation

Be careful with the following cautions during use.

- Use the input within the rated range. Be careful since negligence of this caution may cause troubles of the unit.
- There is a function to hold the maximum value and the minimum value with a measurement factor in this product. A blackout is guaranteed and this value isn't also cleared by a power supply reset. However, the minimum value may be updated in case input is not applied to a power up. For this reason, in order to make the past minimum value hold by powering on, please apply input within 1 second after switching on a power supply.

- The maximum value, a minimum value measurement factor

Measurement factor	Maximum value measurement	Minimum value measurement
Voltage, Current, Demand current, Active power, Demand active power, Reactive power, Power factor, Frequency	○	○
Current leakage , Harmonic (Distortion factor , Effective value , Content)	○	×

- Be careful not to touch any terminal when power is applied to the unit.
- Don't disassemble or modify this unit without any previous permission of our company, otherwise the warranty does not apply to the unit any more. Also, modifications may cause troubles, a fire, or other accidents. For specifications change, etc., please contact us.

7. Maintenance and check

① Wipe off the surface of the unit with a dry soft cloth. The liquid crystal display (LCD) may light during cleaning on the LCD face. However, this phenomenon is caused by the static electricity that may be produced in the filter, and it does not show any trouble. Leave the unit as it is for a while, and the display goes out due to natural discharge.
Don't press the LCD face strongly, otherwise it may be broken.
When the filter has been pressed, it may touch the LCD face to stain the LCD face. However, this phenomenon does not show any trouble, but it is caused by a change of the ambient environment or the like.
The LCD face may be restored to its original condition after a while during the use as it is.

② Check the following items.
◎ Check the unit for damage in appearance.
◎ Check if indications conform to the inputs.
◎ Check if the unit is mounted normally without any loose connections of the terminal board after turning off the power supply.

If a question has arisen or if the unit seems to be defective, please contact us.

8. Other precautions

- Wipe off dirt on the surface with dry cloth softly. Keep in mind that strong rubbing of nameplate leads to character disappearance. Organic solvent is not appropriate for cleaning.
- Neither mercury parts nor the nickel-cadmium battery is being used for this product.
- This product is disposed as an industrial waste (non-inflammable).

9. Warranty

- Warranty period
  It is for one year after product delivery.

- Warranty scope
  In the state of the normal use of product-specification within the range according to this instruction manual, the trouble within the warranty period performs exchange or repair gratuitously.
  However, the shipping expenses and the packing cost in the case of shipping obtain as payment on a customer.
  And, if it corresponds to the next, it does not warrant.
  (1) If it breaks down when converted or repaired except our company.
  (2) If it breaks down by use outside the specification range.
  (3) If the cause of trouble is based on cause other than this product.
  (4) Transportation, movement, damage by falling, and trouble.
  (5) A natural disaster, disaster, etc., if it is the trouble which is irresponsible for a payment side (our company or distributing agent).

  Only a product simplex is applied with a warranty. We cannot bear the responsibility such as the damage and the loss that occurred by the use of this product and trouble or the loss of profits.
  And, a warranty is effective only in Japan.

Content

1. Product outline ····· 9
1.1 Usage of product ····· 9
1.2 Features of product ····· 9

2. The name and function of each part ····· 10

3. Preparation
3.1 Installation ····· 10
3.2 Connections ····· 12

4. Operation ····· 17
4.1 The screen change and function by switch operation ····· 18
4.2 The kind of display ····· 19
4.2.1 Measurement display ····· 19
4.2.2 Alarm detection display ····· 22
4.2.3 Setting display ····· 24
4.3 Operation ····· 25
4.3.1 The main monitor display-element change ····· 25
4.3.2 Phase (line) display change ····· 25
4.3.3 Harmonic measurement display change ····· 26
4.3.4 Watt-hour enlarged display ····· 26
4.3.5 Setting value check ····· 27
4.3.6 Setting mode ····· 28
4.3.7 Reset ····· 29

5. Setting
5.1 Function table ····· 32
5.2 Setting table ····· 37
5.3 Setting in detail explanation ····· 46
5.3.1 Setting mode 1 ····· 46
5.3.2 Setting mode 2 ····· 58
5.3.3 Setting mode 3 ····· 65

6. Specification
6.1 Specification and intrinsic error ····· 69
6.2 Specification, Performance. ····· 73
6.3 Option ····· 75

7. Maintenance and check
7.1 Trouble shooting ····· 77
7.2 Check ····· 77
7.3 Maintenance ····· 77
7.4 Test ····· 78
7.5 Storage ····· 78
7.6 Countermeasures against troubles ····· 78

Appendix table 1 to 3

1. Product outline

1.1 Usage of product

This single unit can measure and monitor demand-current ×3, voltage ×3, current ×3, demand active power, active-power, reactive-power, power-factor, frequency, watt-hour, var-hour, harmonic(voltage, current) and current leakage.
From a low tension circuit to a high tension circuit, it is adapted for various usages, such as a measurement monitor of a power-receiving circuit, an energy conservation power monitor, a demand current measurement monitor, and a harmonic monitor, a leakage monitor.
The intensive monitor united with the system is made in an addendum of analog output and a pulse output.

1.2 Features of product

- A 3-phase 3-wire, single-phase, and single-phase 3-wire common type can be prepared. It's possible to share stock.
- Bar graph 1 measurement and digital 4 measurement are displayed simultaneously.
- Analog output 4 circuit and contact-output 2 circuit can be taken out. (Option)
  A contact output can be selected from a pulse output, an alarm output, and a CPU error output. (Please designate it at an order.) And, An output factor can be selected by setting.
- Two external operation inputs are possible. (Option)
  And, selection of reset input and a display change input is possible at setting.
- Power supply is AC85‐264V, DC80‐143V (for both AC and DC uses).
- The mounting method of this unit is compatible with the mounting method of conventional 110 square mechanical meter. This unit is mounted at 2 diagonal points.
- Integrated value of Wh and varh can indicate expansion to 3rd digit below the decimal point.
- Analog output is with a lower limit limiter.
- A tidal current measurement (output 2 quadrant) change is possible for var and cosϕ.
- Current-leakage measurement corresponds to both Io and Igr.
- A backlight function is equipped. Selection of backlight-on, backlight-off, and auto backlight-off and setting of brightness are possible. Automatic turning off the lights at the time of non-operation can be established.
  LED : White.
- LCD can be chosen from 2 kinds, the type to see from the top and the type to see from the bottom.
  (Please designate it at an order.)
- The product with analog output can be selected from between analog output insulation type and the analog output non-insulation type. (Please specify at the time of an order.)

2. The name and function of each part

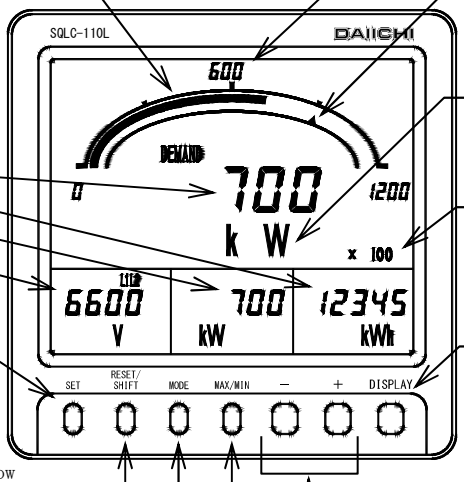

Bar graph display
The measurement value of the main monitor is indicated by the analog.
(Setting which does bar graph display of the measurement value of sub-monitor is also possible.)

Digital display
Measurement monitor can watch 4 elements at the same time.

- ·Main monitor
- ·Sub-monitor (Right)
- ·Sub-monitor (Center)
- ·Sub-monitor (Left)

Scale markings
Scale markings is automatically set in a measurement range.

Upper limit (or lower limit) setting index
An upper limit (or lower limit) set point is displayed.

Unit display
Unit display is automatically set in a measurement range.

Multiplying factor display
Multiplying factor is displayed at the time of an Wh and varh display.

SET

The switch from which integrated value of the amount of electric power is switched to normal display (5 digits of integer) and expansion indication (integer 2 digits + below decimal point, 3 digits) variously.
If it is not operated for 10 minutes after a display change, it will usually return to a display. It is used also as a switch which changes to setting mode. If it continues pushing 3 seconds or more, it will change to setting mode.
In setting mode, it is used as a switch that determines a set point.

DISPLAY

This is a switch which changes the phase (line) display of current (voltage).
If it is not operated for 10 minutes after a display change, it returns to the original phase (line) display. In setting mode, it is used as a switch that terminates setting mode.

− +

The switch to which measurement displays element of main monitor is changed.
If it is not operated for 10 minutes after a display change, it returns to the original measurement display factor. In set mode, it is used as a switch that changes a setting value.

RESET/
SHIFT

This switch resets various alarms.
And, in the maximum and the minimum measurement display, it is used as a switch that resets the maximum and the minimum value.
In setting mode, it is used as a switch to which a setting item is shifted.

MAX/MIN

The switch to which general measurement display (usually) and the maximum minimum measurement display are changed.

MODE

The switch to which general measurement display (usually) and the harmonic measurement (voltage and current) display are changed.
In set mode, it is used as a switch that changes a setting item.

3. Preparation

3.1 Installation

Mount the unit by the attached M5 nuts to a panel of thinner than 10mm, referring to the following external dimensions drawing and panel cutout. Fasten these nuts with tightening torque 2.75 to 3.82N·m.

● Dimension diagram

(1) Multi-meter

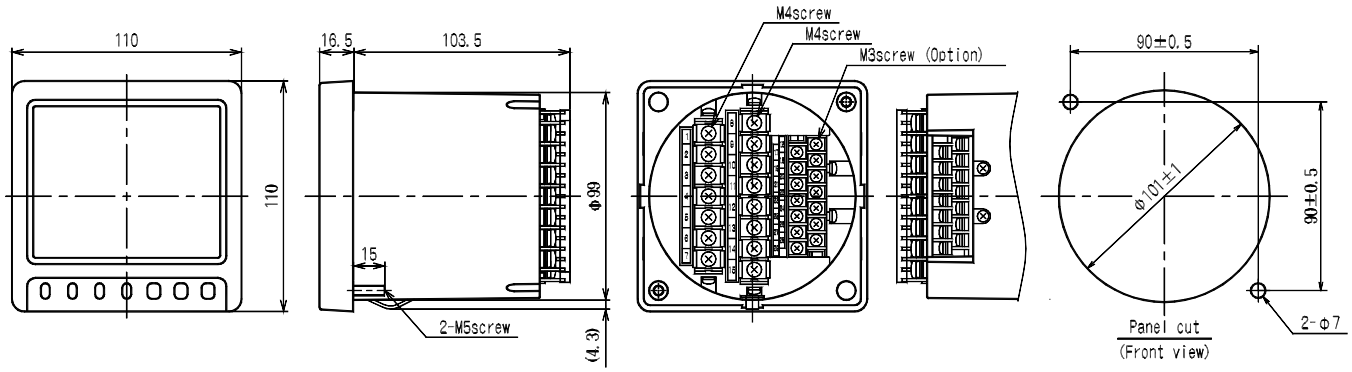

(2) Correspondence ZCT (Our company recommendation) ZCT is not attached with leakage measurement.

50A OTG-LA21 (OMRON Corporation)

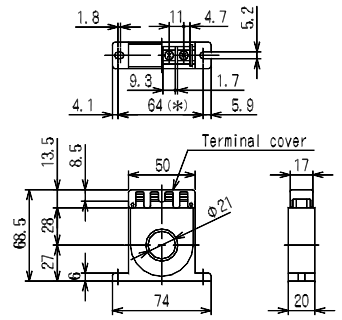

100A OTG-LA30 (OMRON Corporation)

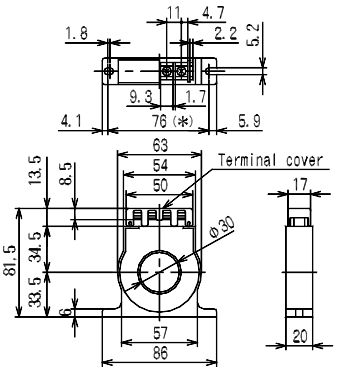

200A OTG-LA42 (OMRON Corporation)

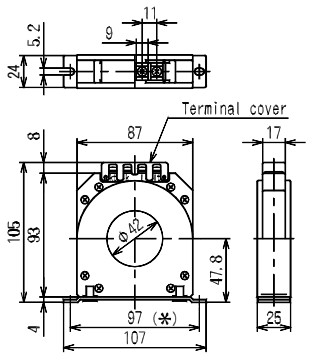

400A OTG-LA68 (OMRON Corporation)

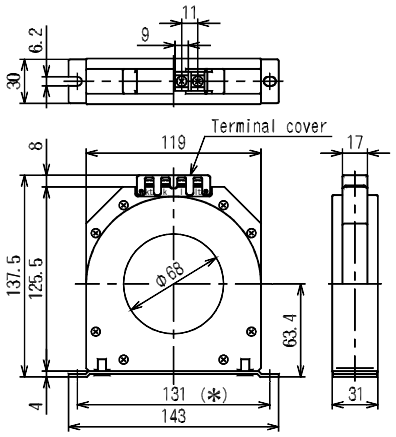

600A OTG-LA82 (OMRON Corporation)

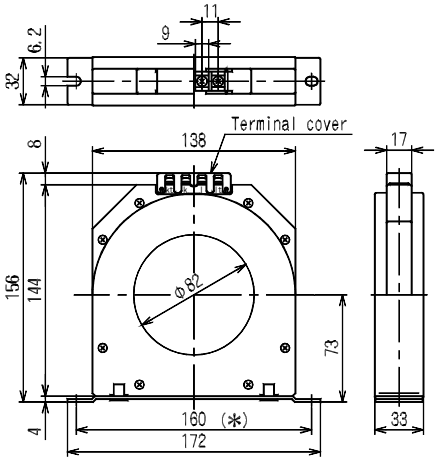

100A(For outdoor) OTG-LA30W (OMRON Corporation)

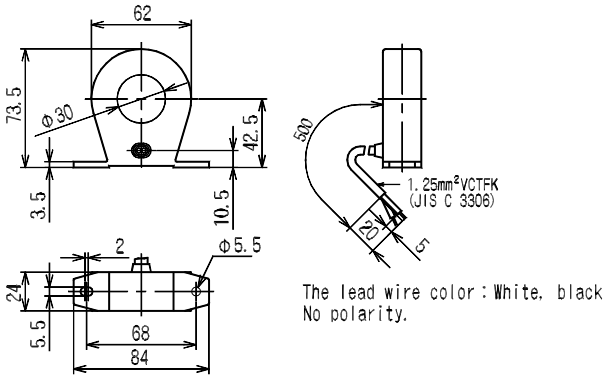

* Installation pitch

This product also corresponds to the next ZCT.

TAIWA ELECTRIC INDUSTRIES CO.,LTD. : Zero-phase current transformer for low voltage (Through-type) TYPE : ZB-□

Hitachi, Ltd. : Through-type ZCT ZR series TYPE : ZR-□

Please consult, in case you use other ZCT.

● Caution on handling

Mount the LCD to obtain an optimum angle, since the contrast changes according to the monitoring angle.

(1) For upper case installation

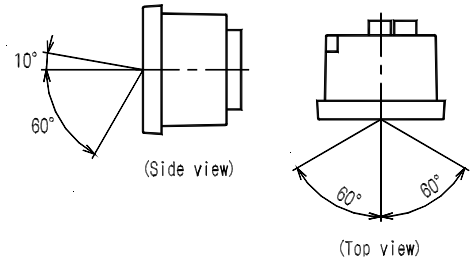

(2) For lower case installation

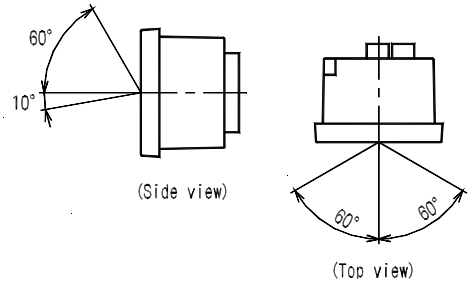

● Installation

(1) A product is put in a cut hole of a panel from a front. A body is inserted until it exceeds retaining stopper of the lower base.

(2) Please fix a product certainly with attached M5 flange nut for installation. Please give a tightening torque as 2.75 to 3.82N･m.

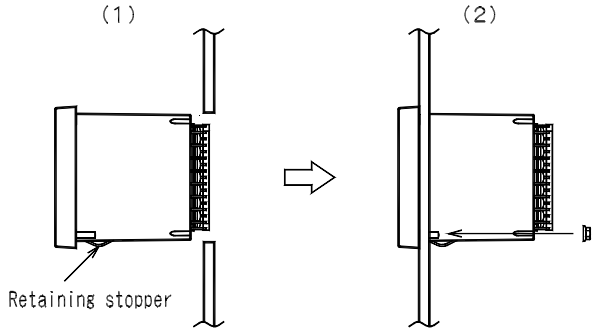

3.2 Connections

Please perform connection after referring to the following wiring diagram.

● Connection drawing (16)

(1) 1φ2W

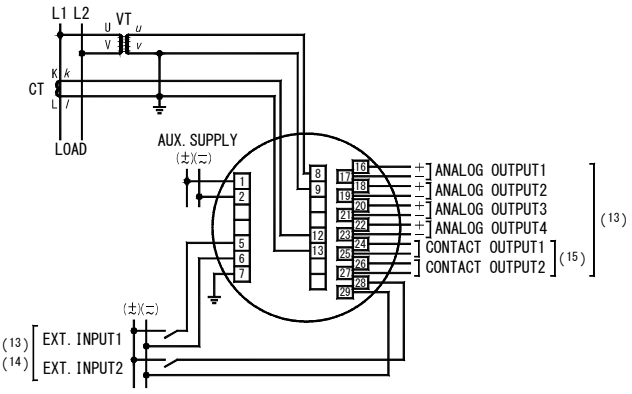

(2) 1φ3W

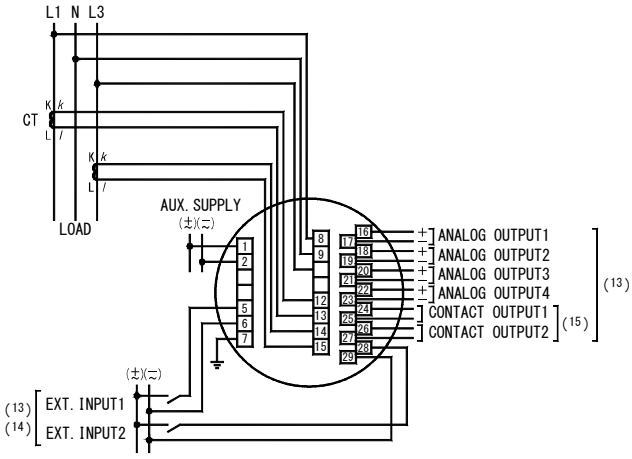

(3) 3φ3W (2VT, 2CT)

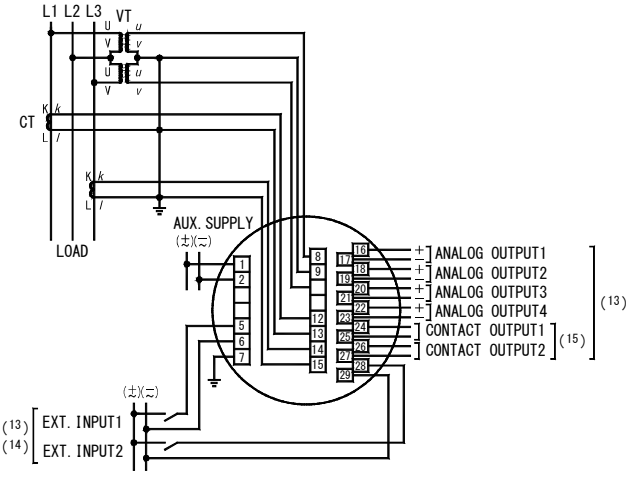

(4) 3φ3W (2VT, 3CT)

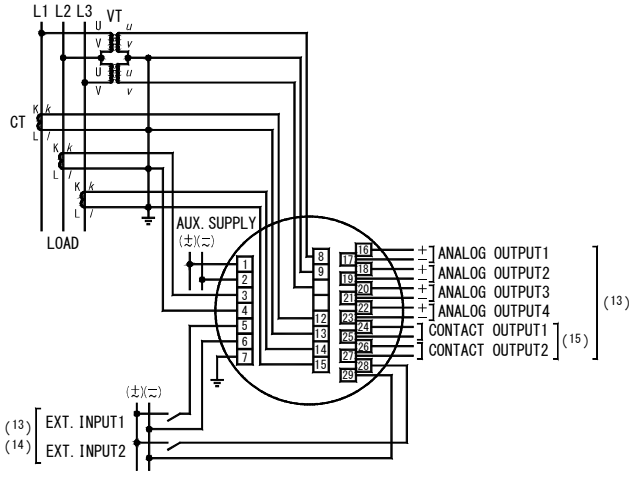

(5) Current input 3φ3W (2CT)

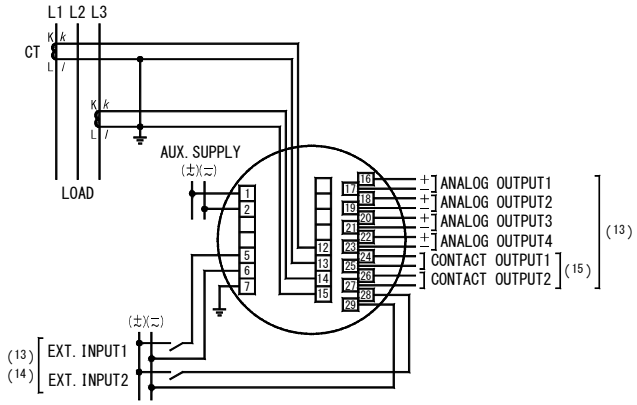

(6) Current input 3φ3W (3CT)

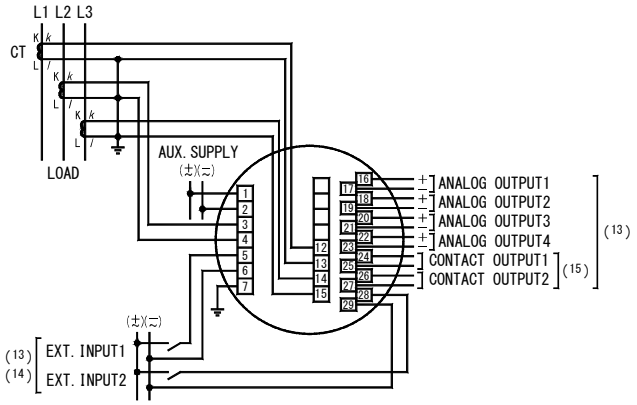

(7) Current input 1φ3W

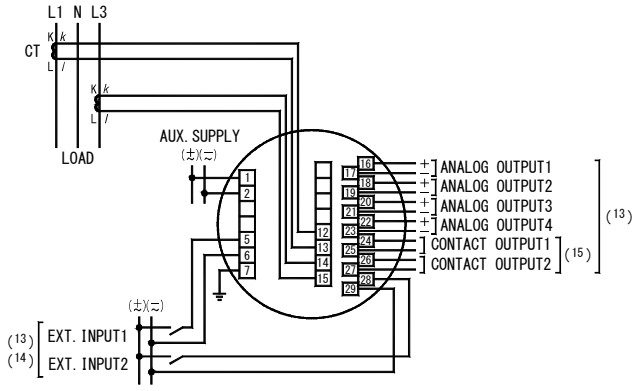

(8) Current input 1φ2W

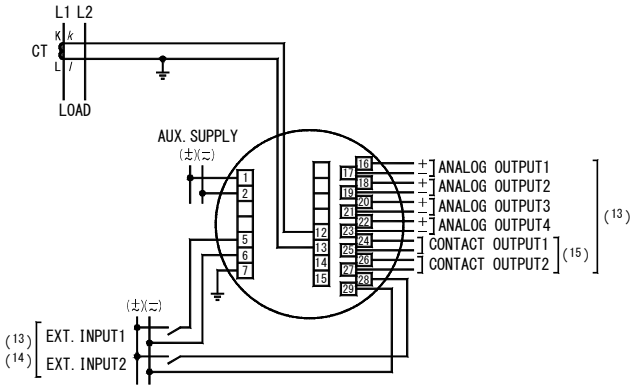

(9) Voltage input 3φ3W

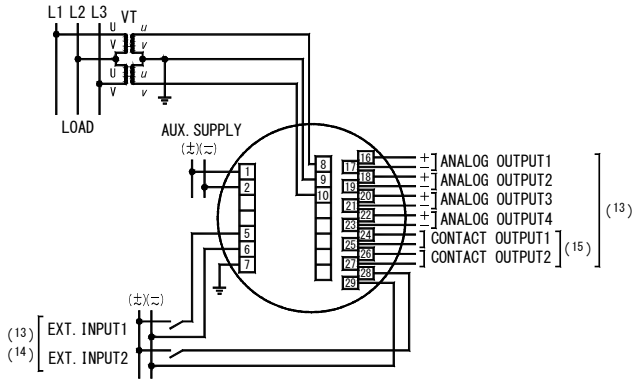

(10) Voltage input 1φ3W

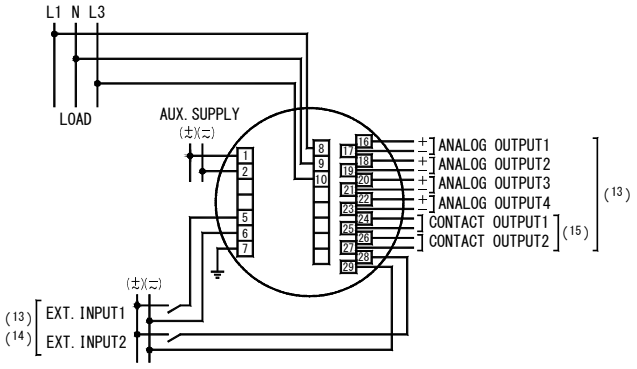

(11) Voltage input 1φ2W

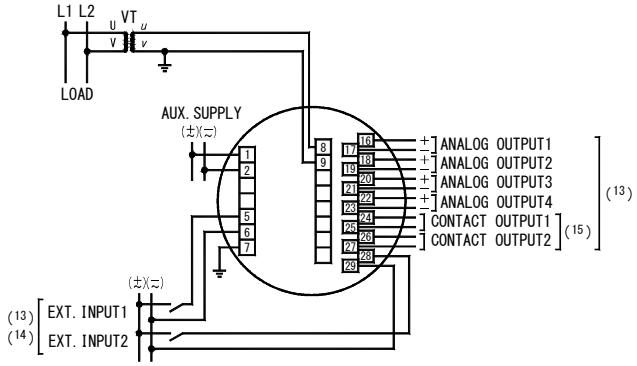

Note(13) Analog output, contact output, external operation input is an option.

Note(14) Can change to external reset function or external display change function by setting.

Note(15) Can choose the contact output among the pulse output, the alarm output, the CPU error output. (Designation)

・Combination of contact output

	Contact output 1	Contact output 2
Pulse＋Alarm	Pulse output	Alarm output
Alarm×2	Alarm output 1	Alarm output 2
Pulse×2	Pulse output 1	Pulse output 2
Pulse＋CPU error	Pulse output	CPU error output
Alarm＋CPU error	Alarm output	CPU error output

Note(16) In case of low-voltage circuit, secondary side grounding of VT and CT is unnecessary. And, VT is unnecessary in case it used 110V or direct 220V.

● Schematics in the leakage monitor of low-voltage circuit (20)(22)

(1) 1φ2W (N-phase earth)

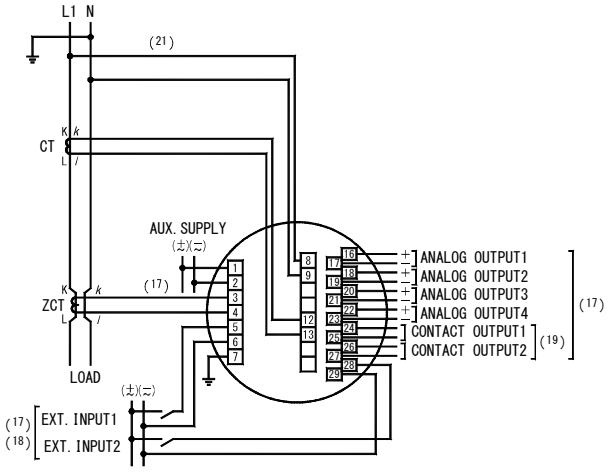

(2) 1φ3W (N-phase earth)

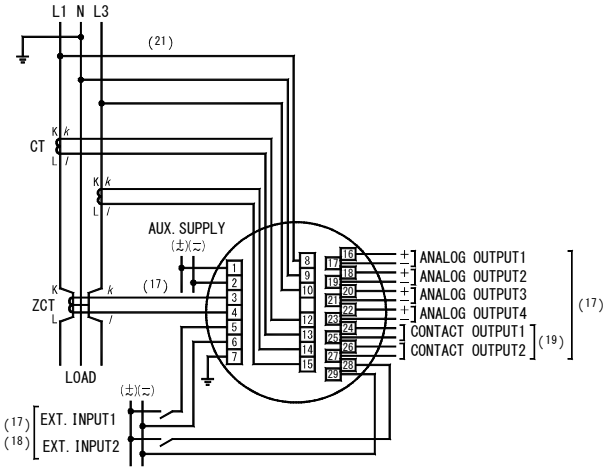

(3) 3φ3W (L2-phase earth)

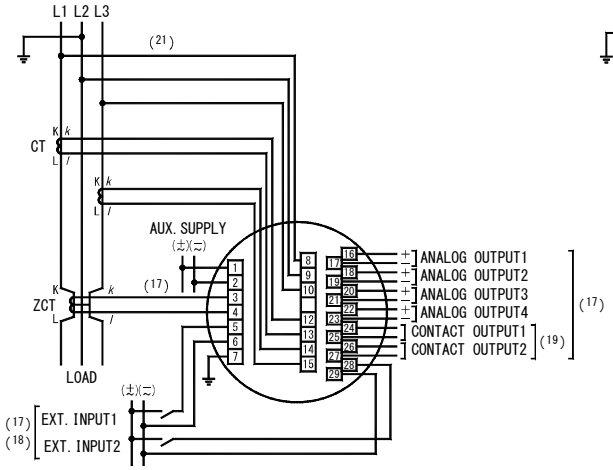

(4) 3φ3W (No earth)

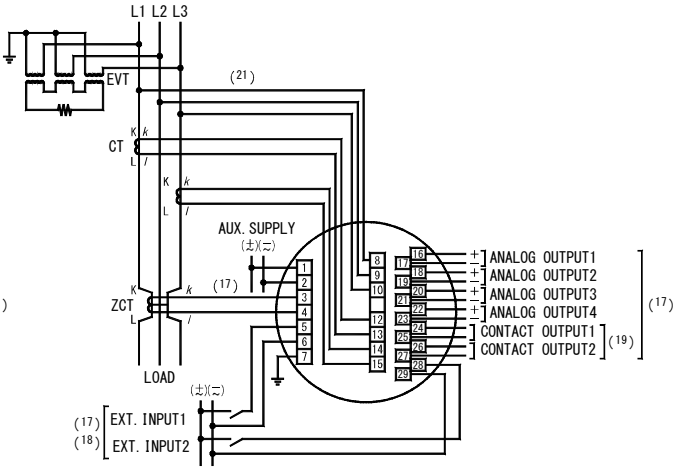

Note(17) Analog output, contact output, external operation input is an option. Zero-phase current input product will be only with leakage current measurement.

Note(18) Can change to external reset function or external display change function by setting.

Note(19) Can choose the contact output among the pulse output, the alarm output, the CPU error output. (Designation)

・Combination of contact output

	Contact output 1	Contact output 2
Pulse＋Alarm	Pulse output	Alarm output
Alarm×2	Alarm output 1	Alarm output 2
Pulse×2	Pulse output 1	Pulse output 2
Pulse＋CPU error	Pulse output	CPU error output
Alarm＋CPU error	Alarm output	CPU error output

Note(20) In case of low-voltage circuit, secondary side earthing of VT and CT is unnecessary. And, VT is unnecessary in case it used 110V or direct 220V.

Note(21) Voltage input is needed at the time of Igr measurement in a short circuit electric current.

Note(22) A voltage input and a leakage input are not insulated. Please use it combining ZCT.

● In case of installing ZCT to ground wire by leakage monitor.

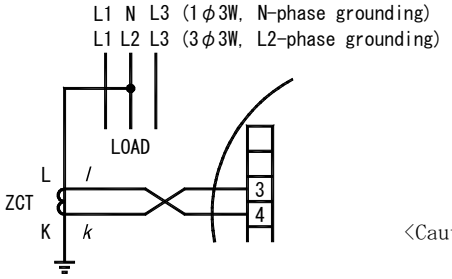

<Caution> When doing Igr measurement by a leakage monitor, please be careful about polarity of ZCT.

● Caution on connection

(1) Mount the terminal cover without fail for safety after the end of connections.

(2) Separate the input wiring and output wiring from each other without fail, and take a preventive measure against malfunction due to external noises.

(3) Connect the grounding terminal E (No. 7 terminal) to the ground without fail for enhancing the shield effect. Keep the grounding resistance between the grounding terminal and the ground to be lower than 100Ω.

(4) Keep a distance of more than 30cm between this unit and the circuit breaker as well as between this unit and the relay contact signal line.

(5) No protection is necessary for this unit even if the transmission line may be affected by an induced lightning surge or the like when transmitting an analog output to the receiver. Mount an about 500V arrester or the like between the line surge protector and the ground as well as between the transmission line and the ground on the receiver side for the purpose of protecting the devices on the receiver side.

(6) It is recommended to mount a surge killer outside when connecting an inductive load to the pulse output and alarm output. If no surge killer is mounted, the contact life may shorten.

(7) Please do not earth the output terminal of ZCT.

(8) Please shorten wiring for this product from secondary of ZCT as much as possible. And, in case secondary wiring becomes close to other large current circuits, please use shielding wire.

(9) In case it measures a leakage current Igr, it is necessary to measure correctly the phase angle of a voltage input and a zero phase-current input. Wiring of ZCT (primary, secondary) and wiring for this product should check schematics.

● The distinction method of the primary side polarity of ZCT

(1) Product of OMRON Corporation

The direction (near side) which can read correctly the character of the name plate currently stuck on ZCT is "K".

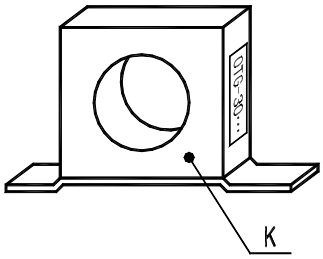

(2) Product of TAIWA ELECTRIC INDUSTRIES CO.,LTD.

① ZB-30M, ZB-58M

A side with " k " and " l " of the terminal for secondary wiring connection is "L".

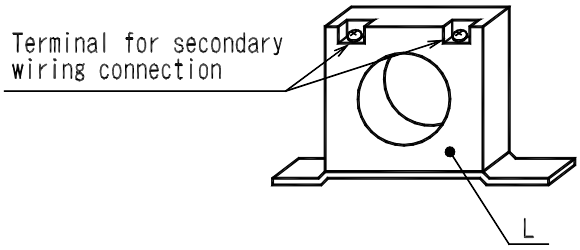

② ZB-70M

The "検" mark side of ZCT is "L".

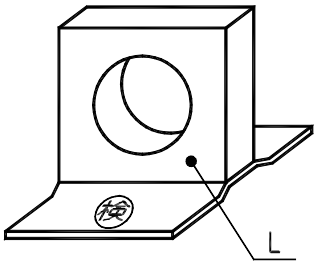

③ ZB-90M

It is printed by ZCT.

(3) Product of Hitachi, Ltd.

① ZR-30B, ZR-58B

A side with " k " and " l " of the terminal for secondary wiring connection is "L".

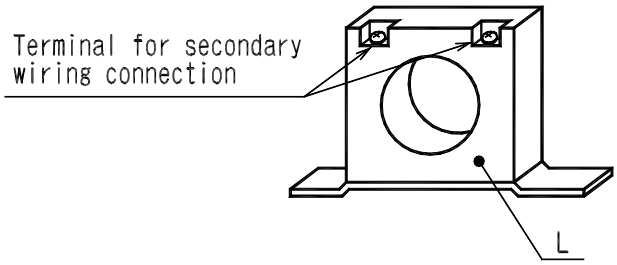

② ZR-65, ZR-80

The name plate side of ZCT is "K".

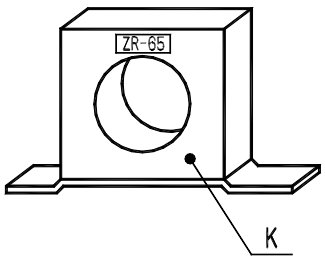

4. Operation

● The function of switch

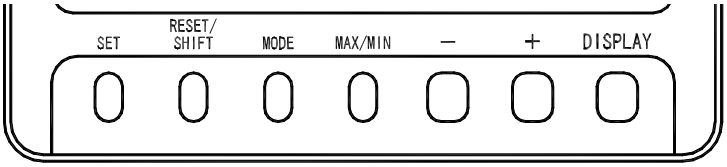

Switch	Function
SET	The integrated value of electric energy is changed to the usual display and an enlarged display. If it continues pushing 3 seconds or more, it will change to setting mode. In setting mode, it is used for the determination of a set point.
RESET/SHIFT	Various kinds of alarms are reset. The maximum value and the minimum value are reset in the maximum minimum measurement display. In setting mode, it is used for movement of a setting item.
MODE	The usual general measurement display and harmonic measurement (voltage, current) display are changed. In setting mode, it is used for the change of a setting item.
MAX/MIN	The usual measurement display and maximum value or minimum value display are changed.
+, −	The measurement display element of the main monitor is changed. In setting mode, it is used for change of a set point.
DISPLAY	A phase (between lines) display of current (voltage) is changed. It is used in case it terminates setting mode. And, it is used in case it returns the display combination of a measurement factor.

● Convenient functions

(1) In case a measurement change or a phase change is performed and the original screen composition is not clear anymore, DISPLAY is pushed for more than 3 seconds or it's no-operation for 10 minutes and returns to original screen structure.

(2) Even if it stops operation with setting mode, it returns to the display mode in 10 minutes.

● 7 segment displays

This product shows the guidance in various setting using 7 segment displays besides a display of a measurement value. A digital readout and 7 segment displays corresponding to each alphabet are shown in the following.

A	*B(b)*	*C*	*D(d)*	*E*	*F*	*G*	*H*	*I*	*J*	*K*	*L*	*M*
A	b	C	d	E	F	G	H	I	Non-display	Non-display	L	n
N(n)	*O(o)*	*P*	*Q(q)*	*R(r)*	*S*	*T(t)*	*U(u)*	*V*	*W*	*X*	*Y(y)*	*Z*
n	o	P	q	r	S	t	u	V	W	Non-display	y	Z
0	*1*	*2*	*3*	*4*	*5*	*6*	*7*	*8*	*9*			
0	1	2	3	4	5	6	7	8	9			

4.1 The screen change and function by switch operation

This product changes various screens by switch operation. Here, the change step of the screen by switch operation is explained.

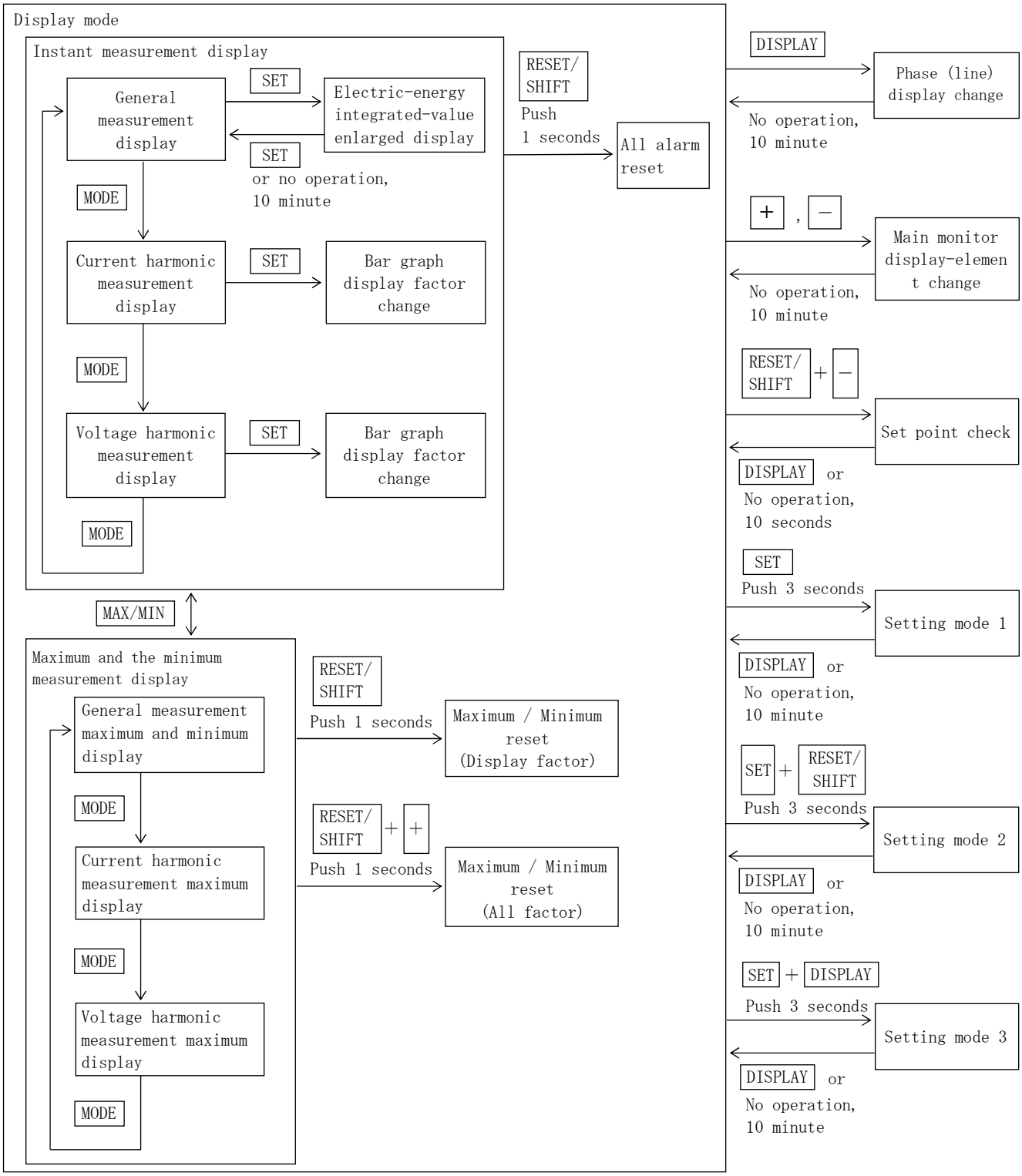

4.2 The kind of display

4.2.1 Measurement display

A measurement value display has the three following types of displays.
The change of the measurement display element of the main monitor by switch operation and the change of the phase / line display of current / voltage is possible (temporarily).
In a general measurement display, if switch operation is not performed for 10 minutes after changing a display element, it returns to the original measurement display element automatically.

① General measurement display
Measurement factors, such as current, voltage, and active power, are displayed.
The measurement value of four factors is displayed at the maximum.
Setting which always displays a measurement factor is possible. And, it is possible to change to a display of the maximum value and the minimum value, about the measurement factor which performs holding of the maximum value and the minimum value by switch operation.
These maximum values and the minimum value are reset by switch operation (it updates to the instantaneous value at the time).
In addition, as for the maximum value and the minimum value, power-supply reset is not cleared either. And, this display is held by even after 10 minutes of switch non-operation.

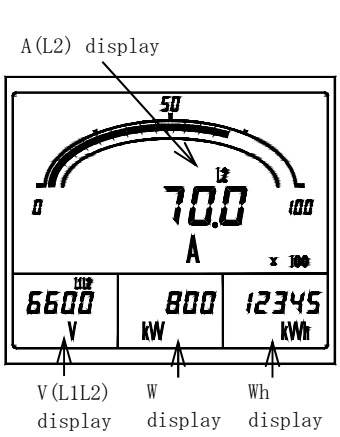

General measurement display

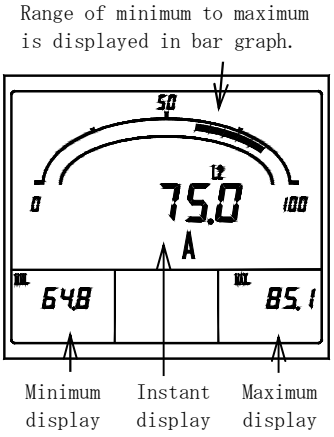

General measurement maximum and minimum display

・The example of a measurement display of each measurement factor (Main monitor) ・・・ Harmonic measurement is excluded.

Measurement factor	Example of display	Note	Measurement factor	Example of display	Note
Voltage	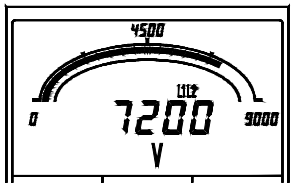		Current	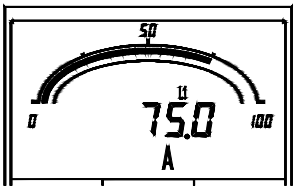	
Current leakage	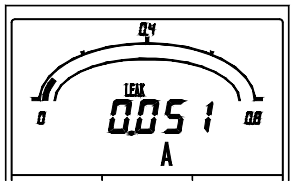	“LEAK” is display	Demand current	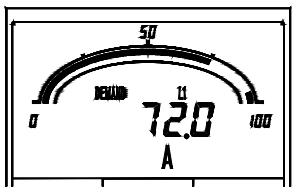	“DEMAND” is display
Watt-hour (Power receiving)	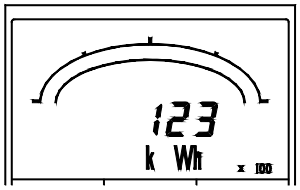		Watt-hour (Power transmission)	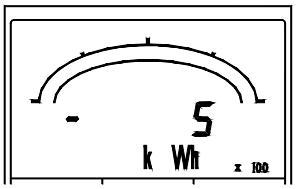	“—” is display
Active power	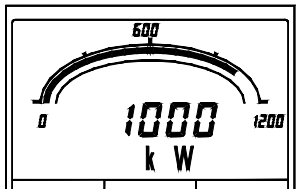		Demand active power	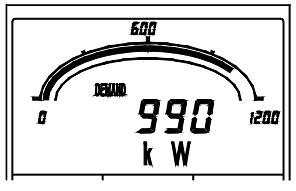	“DEMAND” is display

Measurement factor	Example of display	Note	Measurement factor	Example of display	Note
Reactive power	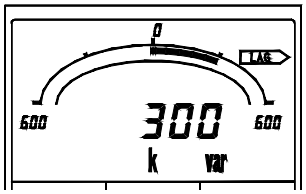	LAG or LEAD display	Power factor	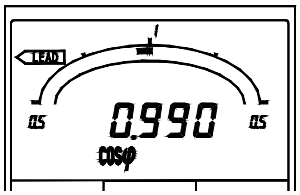	LAG or LEAD display
var-hour (Power receiving, LAG)	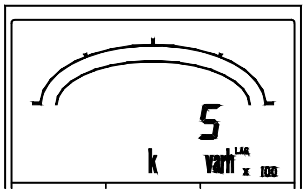	"LAG" display	var-hour (Power receiving, LEAD)	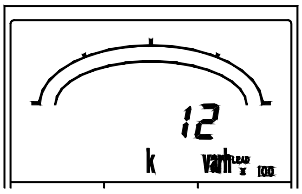	"LEAD" display
var-hour (Power transmission, LAG)	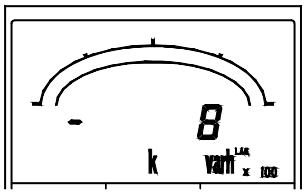	"LAG" and "—" display	var-hour (Power transmission, LEAD)	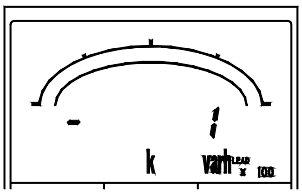	"LEAD" and "—" display
Frequency	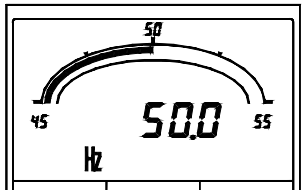				

・ About a current-leakage measurement display

The current leakage of this product can select a factor from the next two types.

The system by which Io where an electric current for the capacity by a earth capacitance (Ic) and an electric current for the resistance by insulation degradation (Igr) are synthesis is measured.

The method which measures only the resistance part current (Igr) by insulation degradation etc.

By the Igr method, a current leakage is calculated from a voltage input and a zero phase-current input. In case of 3-phase 3-wire (1-phase earthing), in the range whose phase angle (leading-phase angle of the zero-phase current by reference voltage) of these inputs is 150 to 350° , it will become the outside of a measuring range and a measurement display of a zero-phase current will be "----".

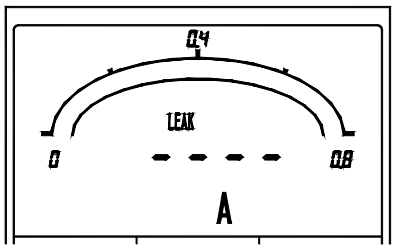

The measurement display besides an Igr measuring range

② Current harmonic measurement display

It is a measurement factor display of the distortion factor of current, relative harmonic content, harmonic effective value, etc. The measurement value of three factors is displayed at the maximum.

About sub-monitor (center) and sub-monitor (right), it is possible to change to the factor that always indicates by measurement. And, it is possible to change to a display of the maximum value by switch operation.

These maximum values can be reset by switch operation (it updates to the instantaneous value at the time).

In addition, as for the maximum value, even power-supply reset is not cleared. And, a display is held, even after elapsing for 10 minutes without operating a switch.

Measurement display element)

Main monitor : Distortion factor

Sub-monitor (Left) : 5th conversion or harmonic order (n)

Sub-monitor (Center) : Harmonic 5th conversion content or harmonic nth content (n=3, 4, 5, 7, 9, 11, 13, 15)

Sub-monitor (Right) : Fundamental-wave effective value , 5th harmonic conversion effective value or harmonic nth effective value (n=3, 4, 5, 7, 9, 11, 13, 15)

③ Voltage harmonic measurement display

It is a measurement factor display of the distortion factor of voltage, relative harmonic content, harmonic effective value, etc. About a function, it is the same as a current harmonic measurement display.

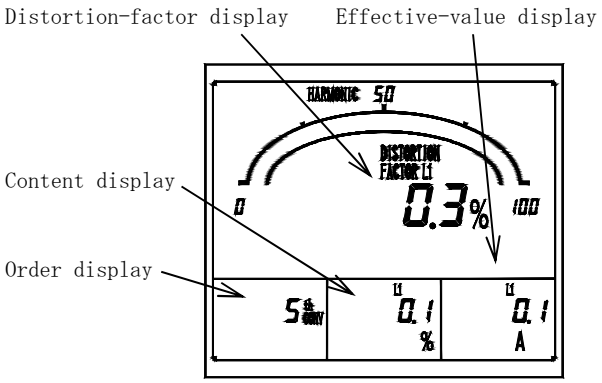

Current harmonic measurement display.

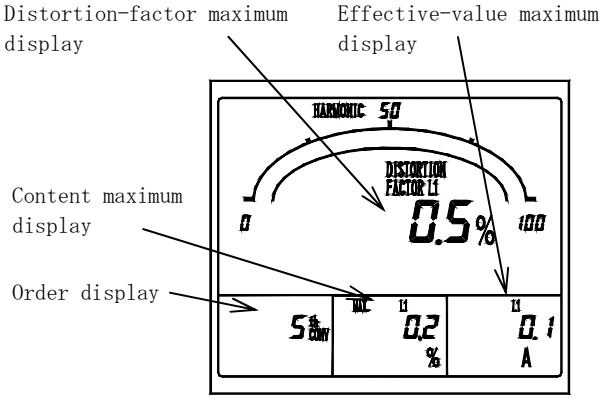

Current harmonic measurement maximum display.

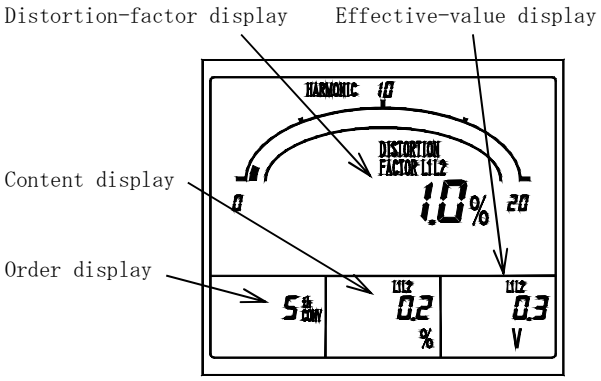

Voltage harmonic measurement display.

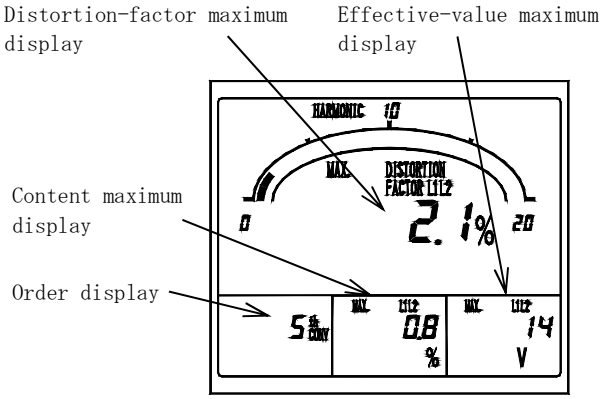

Voltage harmonic measurement maximum display.

4.2.2 Alarm detection display

The alarm value setting is a possible measurement factor (demand current and harmonic, etc.), it displays in case an input exceeds a set point.
Besides the usual measurement display, the detected factor is displayed on a screen upper case.
In addition, in case setting OFF (not use) as measurement factor, it does not detect.
And in the case of with an alarm-output option, it is possible to do an alarm output (relay make contact) to the outside simultaneously with a screen display.

Alarm display possible factor) Demand current, Demand, Harmonic distortion factor (current, voltage),
Harmonic 5th conversion content (current, voltage),
Harmonic nth content (current, voltage n=3, 4, 5, 7, 9, 11, 13, 15),
Voltage, Current leakage

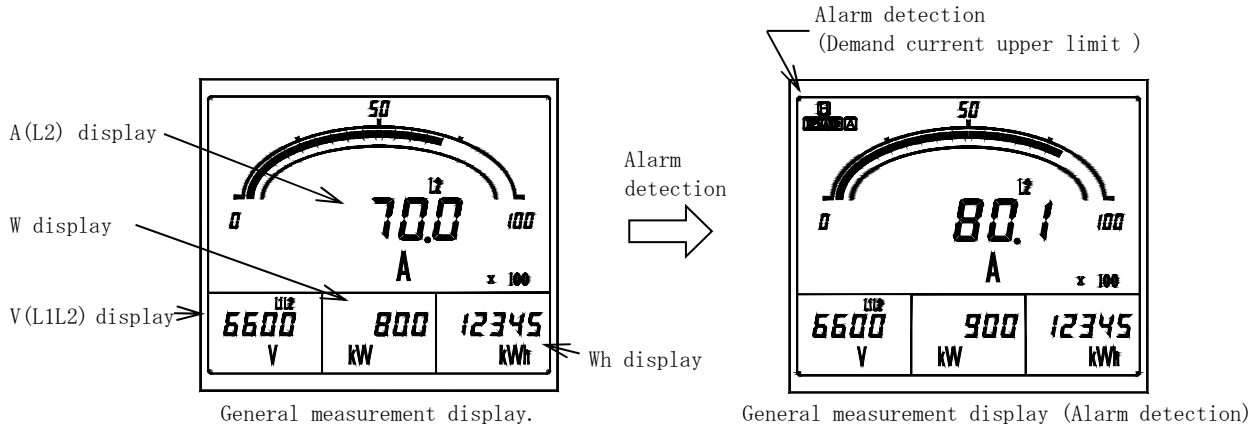

・The example of a display at the case of the detection in each alarm factor.
In case the alarm factor is indicating by measurement at the main monitor or the sub-monitor, a measurement value constitutes a blinking display.
The displays after an alarm return.
In case a return method is automatic reset setting : It returns to the usual measurement display.
In case a return method is manual reset setting
: A detection display and an alarm output hold (in case setting as an alarm output of applicable factor).
The return in this case needs alarm reset operation. Please refer to "4.3.7 Reset" about alarm reset.

Alarm factor		Example of a display	Alarm factor		Example of a display
Demand current	Upper limit (H)	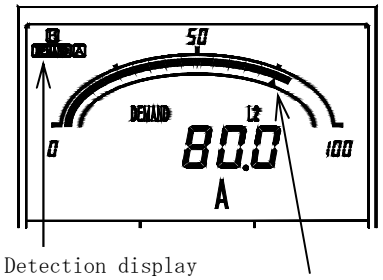	Voltage harmonic 5th conversion content	Upper limit (H)	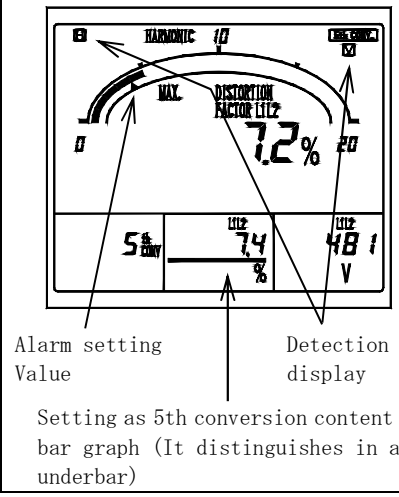

Alarm factor		Example of a display	Alarm factor		Example of a display
Demand	Upper limit (H)	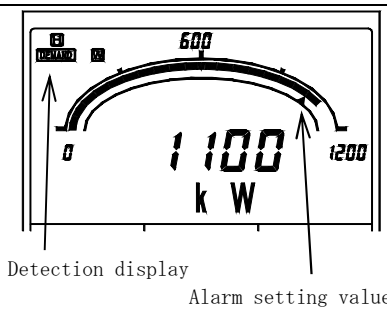 Detection display Alarm setting value	Voltage harmonic nth content	Upper limit (H)	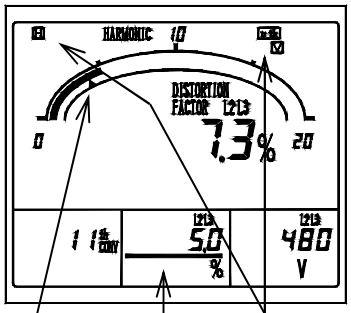 Alarm setting Value Detection display Setting as 11th content of bar graph (Distinguishes in an underbar)
Current leakage	Upper limit (H)	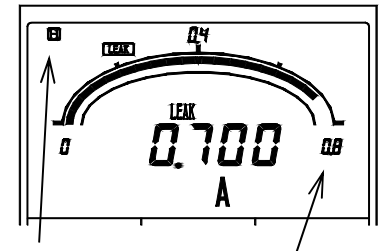 Detection display Rated sensitivity current value	Voltage distortion factor	Upper limit (H)	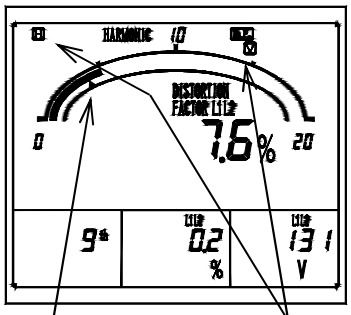 Detection display Alarm setting Value
Current harmonic 5th conversion content	Upper limit (H)	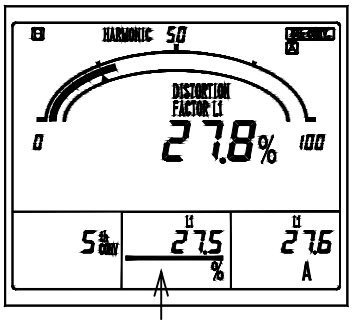 Setting as 5th conversion content of bar graph (Distinguishes in an underbar)	Voltage	Upper limit (H)	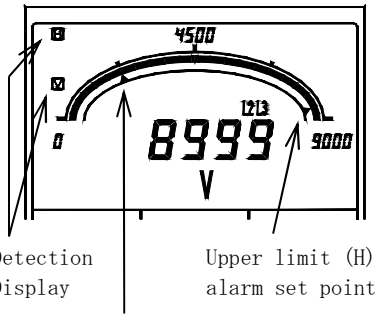 Detection Display Upper limit (H) alarm set point Lower limit (L) alarm set point
Current harmonic nth content	Upper limit (H)	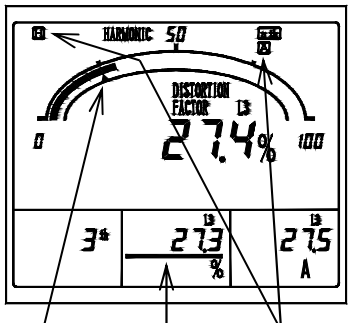 Alarm setting value Detection display Setting as 3rd content of bar graph (Distinguishes in an underbar)	Voltage	Lower limit (L)	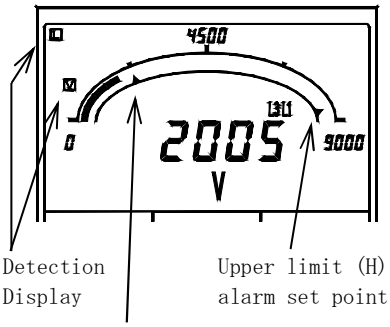 Detection Display Upper limit (H) alarm set point Lower limit (L) alarm set point

Alarm factor		Example of a display
Current distortion factor	Upper limit (H)	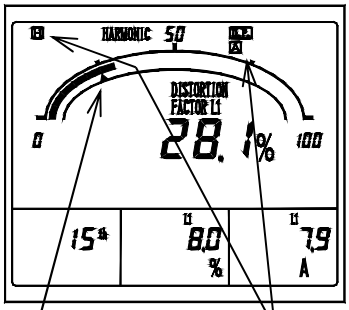

4.2.3 Setting display

The display of various setting. There are three types of setting modes according to the contents of a setting. Refer to "5. Setting" for the operation in setting mode, and the detailed contents of a setting.

① Setting mode 1
Setting of a measurement display element, an alarm output, and an alarm value is mainly performed.
And, an alarm output can be tested in this setting mode.

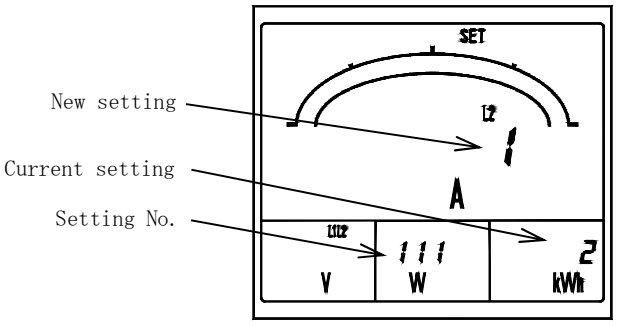

Setting mode 1 (No.111 Display pattern)

② Setting mode 2
Setting of measurement range, analog output, pulse output, and measurement display ON/OFF is mainly performed.
And, initialization of a setting value and reset of watt-hour integrated value can be performed in this setting mode.

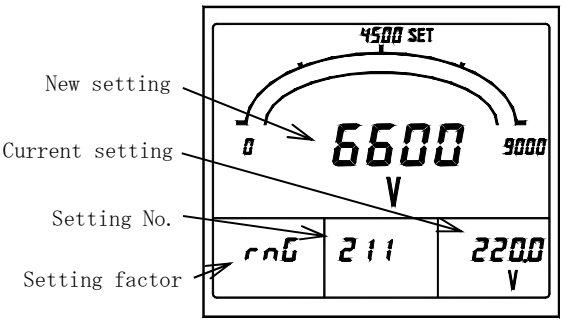

Setting mode 2 (No.211 Voltage range)

③ Setting mode 3
Setting of an input circuit and tidal current measurement is mainly performed.
And, analog output can be adjusted in this setting mode.

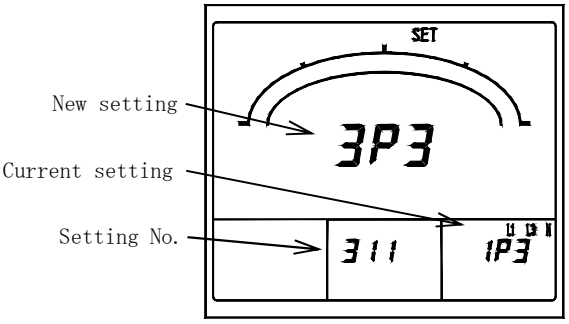

Setting mode 3
(No.311 Input circuit phase line change)

4.3 Operation

4.3.1 The main monitor display-element change

The measurement display element of the main monitor is changed. A change is performed by [+] [−].
This operation can be performed also except a general measurement display (harmonic measurement display, maximum display and minimum display). However, in a harmonic measurement display, a sub-monitor changes with a harmonic order. (The main monitor is distortion-factor fixation.)
After changing a measurement display element, if a switch is not operated for 10 minutes, it will return to the original measurement display element automatically.
In a harmonic measurement display and maximum display and minimum display, even if a switch is not operated for 10 minutes, it does not return to the original display.
Setting can perform same operation in external operation input. Please refer to "5.3.2 Setting mode 2, (4) external operation input setting" about the setting method. Please refer to "6.3 Option specification" about external operation input.

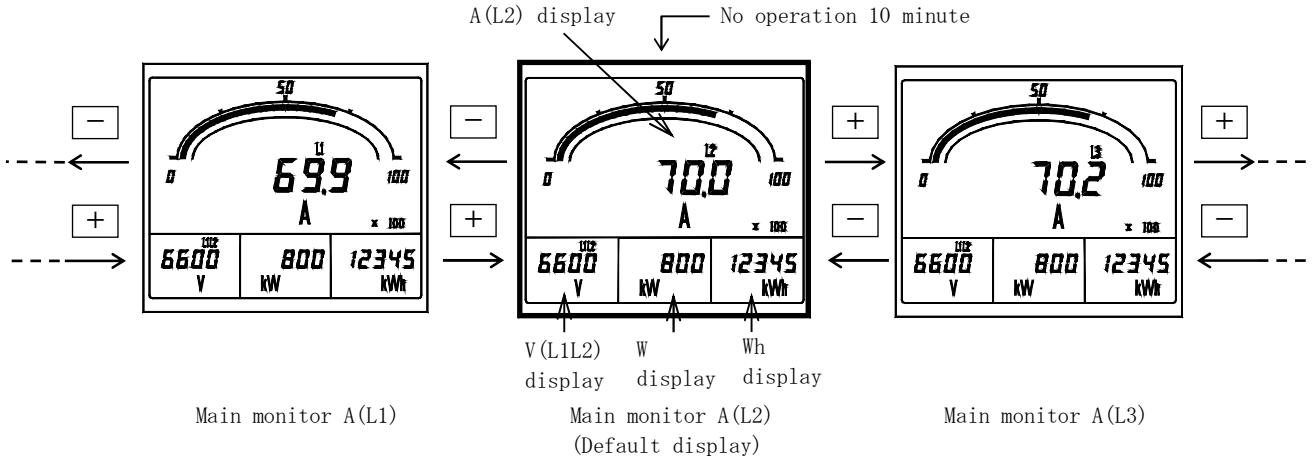

4.3.2 Phase (line) display change

A phase (line) display of current or voltage is changed. (Everything which is being indicated)
A change is performed by [DISPLAY]. This operation can be performed also except a general measurement display (harmonic measurement display, maximum display and minimum display).
In addition, after changing a phase (line) display, if a switch is not operated for 10 minutes, it will return to the original phase (line) display automatically.
In a harmonic measurement display and maximum display and minimum display, even if a switch is not operated for 10 minutes, it does not return to the original display.
Setting can perform same operation in external operation input. Please refer to "5.3.2 Setting mode 2, (4) external operation input setting" about the setting method. Please refer to "6.3 Option specification" about external operation input.

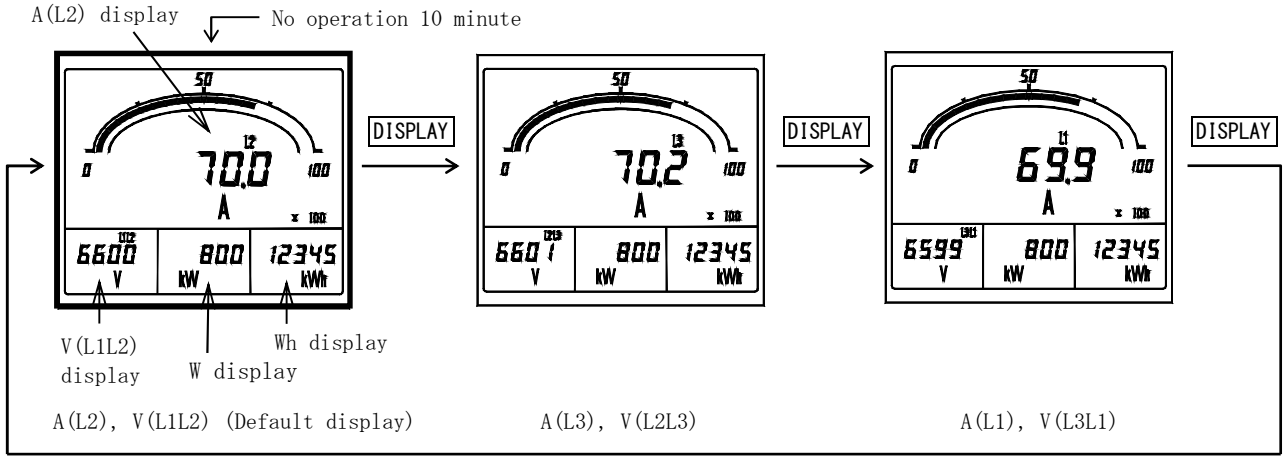

4.3.3 Harmonic measurement display change

A general measurement display and a harmonic measurement display are changed. A change is performed by MODE.
Whenever it pushes a switch, it changes as follows. General measurement display → Current harmonic measurement display → Voltage harmonic measurement display → General measurement display ・・・
This operation can also perform the maximum display and minimum display.
In that case, it changes in order of a next. General measurement maximum and the minimum display → Current harmonic measurement maximum display → Voltage harmonic measurement maximum display → General measurement maximum and the minimum display ・・・
In addition, about this operation, even if it does not do switch operation for 10 minutes, it does not return to the original display.

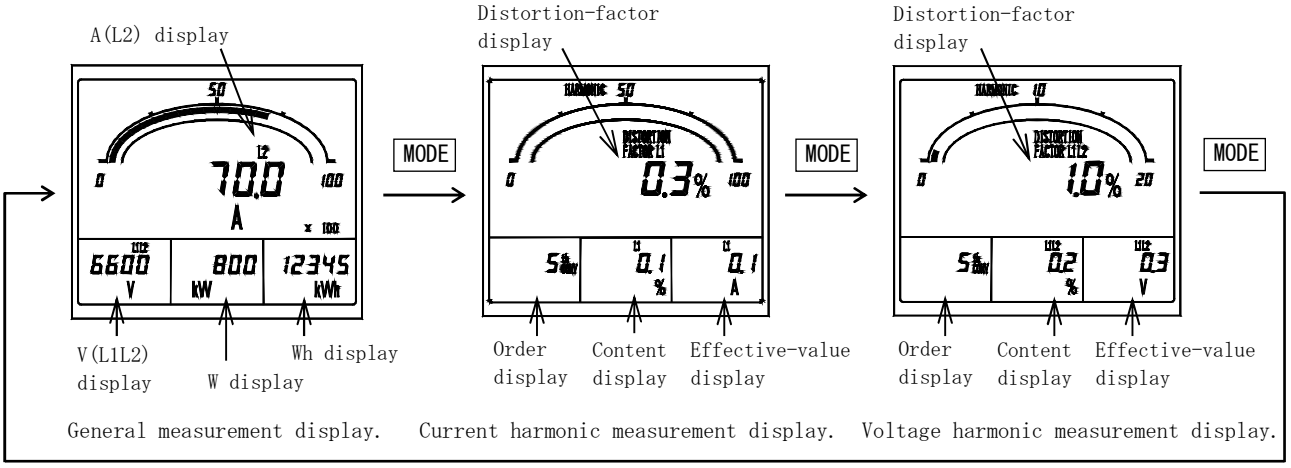

4.3.4 Watt-hour enlarged display

In case electric energy is being displayed by the general measurement display, an electric-energy display is usually changed to a display (5 digits of integers), and an enlarged display (2 digits integer + below decimal point, 3 digits).
A change is performed by SET.
After an enlarged display, if a switch is not operated for 10 minutes, it returns to the usual display automatically.

<Caution > If it continues pushing SET 3 seconds or more, it will become the setting mode 1. (An electric-energy display does not change)

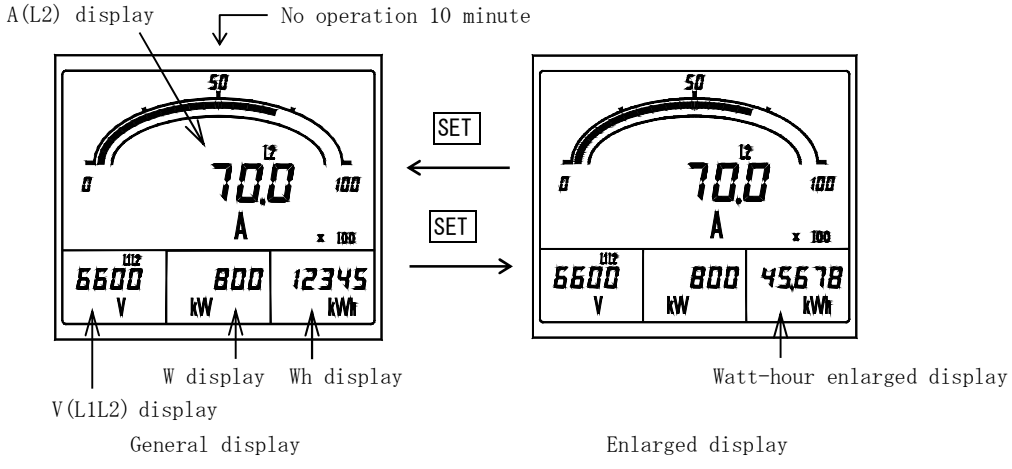

4.3.5 Setting value check

A voltage range (VT ratio), a current range (CT ratio), and an alarm-output set point are checked.
Check is RESET/SHIFT and − are pushed simultaneously and performed.
The change of a set point is carries out by + and −.
This operation can be performed also except a general measurement display (harmonic measurement display, maximum display and minimum display). DISPLAY is pushed in case it returns to the original measurement display.
And, if a switch is not operated for 10 seconds after a set point check, it will return to the original measurement display automatically.

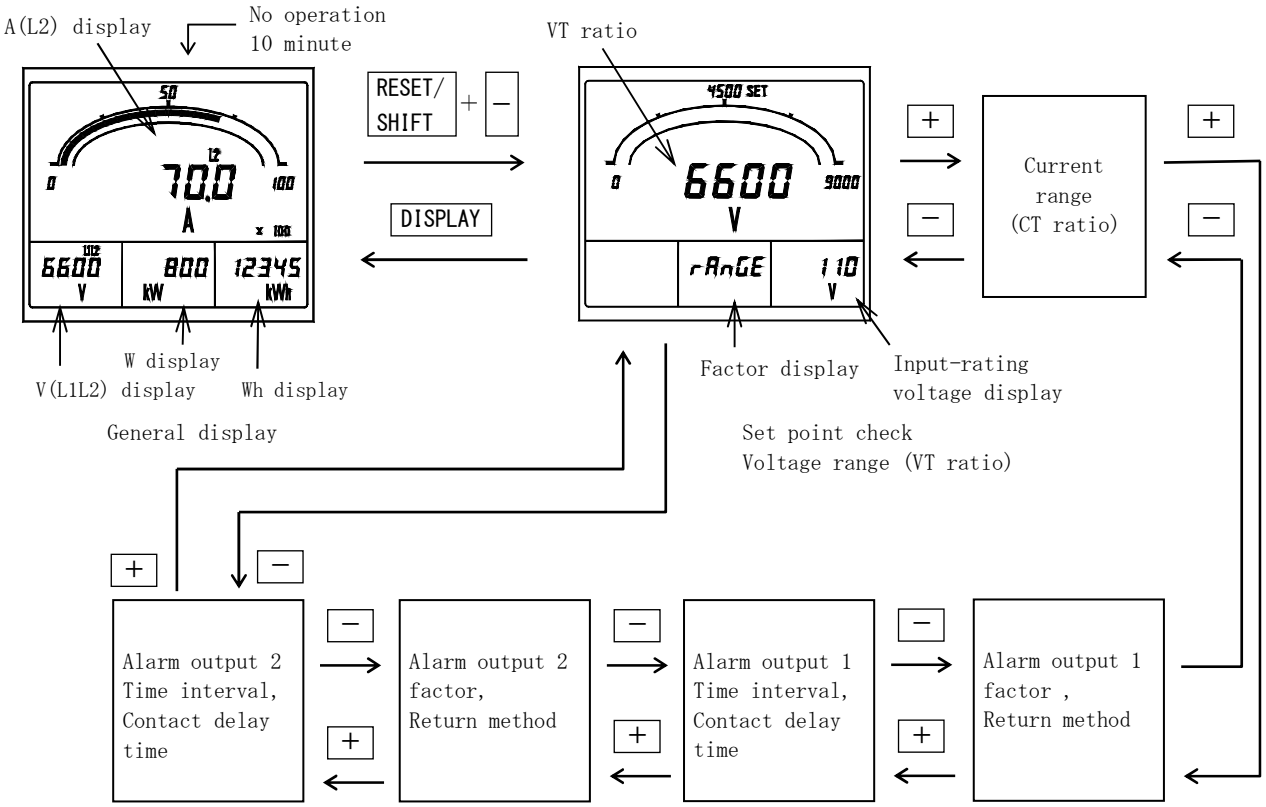

4.3.6 Setting mode

Various kinds of setting are performed. Setting mode is three types, and operations are different. DISPLAY is pushed in case it returns to the original measurement display. And, if a switch is not operated for 10 minute after a set point check, it will return to the original measurement display automatically. Operation and the contents of setting (detail) in setting mode, please refer to "5 Setting".

- Setting mode 1 : Press SET for longer than 3 seconds.
- Setting mode 2 : Press SET and RESET/SHIFT together for longer than 3 seconds.
- Setting mode 3 : Press SET and DISPLAY together for longer than 3 seconds.

<Reference> This operation can be performed also except a general measurement display (harmonic measurement display, maximum display and minimum display).

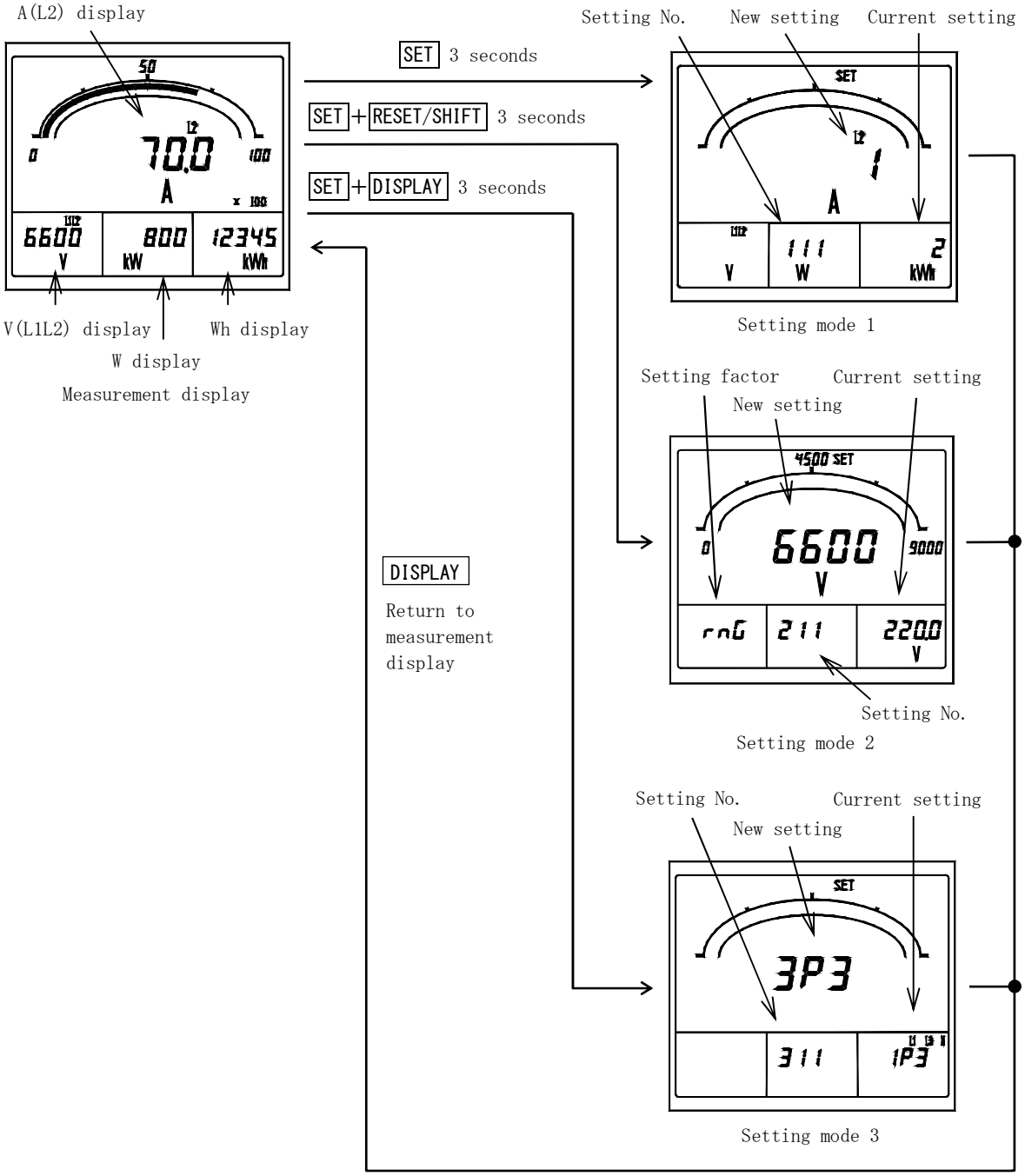

4.3.7 Reset

Various kinds of reset are performed. The kind of reset is as follows and operations are different, respectively.
Reset of watt-hour integrated value (zero clear),
Reset of maximum value and minimum value (it updates to the instantaneous value at the time),
Alarm-output reset (OFF of an alarm output (at the case of manual reset setting)).
And, the operation from each measurement display constitutes conditions at each reset.

(1) Watt-hour integrated-value reset

It resets by package about the integrated value of various watt-hour. Watt-hour reset is performed in the setting mode 2. In detail explanation in the setting mode 2, please refer to "5.3.2 Setting mode 2".

① Press SET and RESET/SHIFT together for longer than 3 seconds. It goes into the setting mode 2.
② MODE is pushed until setting is set to No.271. Further RESET/SHIFT is pushed once and it is made a watt-hour-reset display.
③ Press SET for longer than 3 seconds.
④ DISPLAY is pushed and it returns to a measurement display.

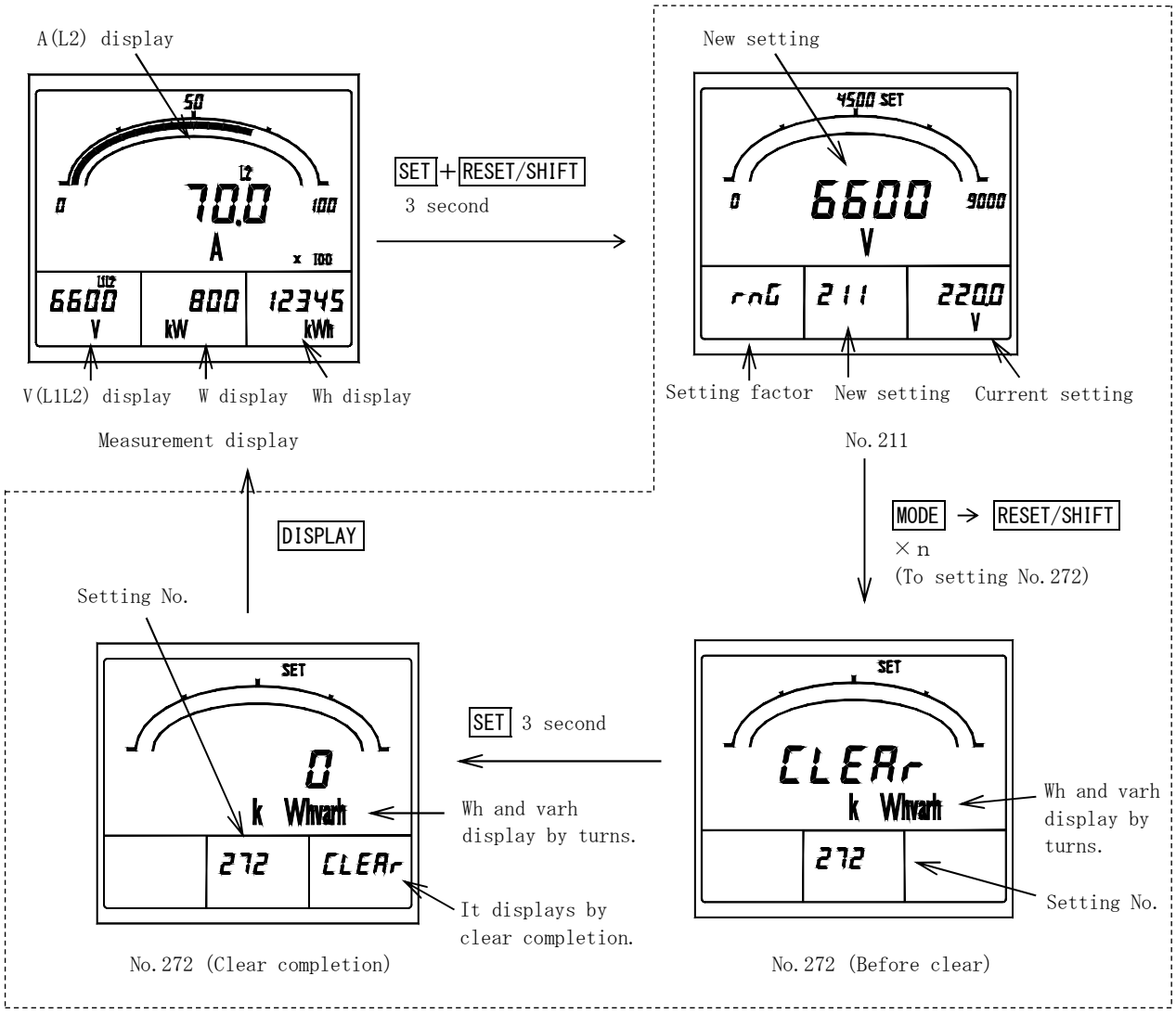

Setting mode 2

(2) Reset of maximum value and minimum value
Reset of the various measurement values of maximum value and minimum value is performed.
This reset has two types of methods. (How to perform according to a measurement factor individual.
How to reset all maximum values and minimum values by package.)

a) Individual reset
Reset of only a certain differential maximum value or the minimum value is performed.
Other maximum values and minimum values are not reset by this operation.
① A measurement factor to reset is displayed. (General measurement maximum value, minimum value, or Current, voltage harmonic measurement maximum display)
② Press RESET/SHIFT for longer than 1 seconds.

<Caution> An alarm output will be reset if this operation is performed by instant measurement display. Please be sure to perform this operation after displaying the maximum value and a minimum value measurement factor to make it reset.

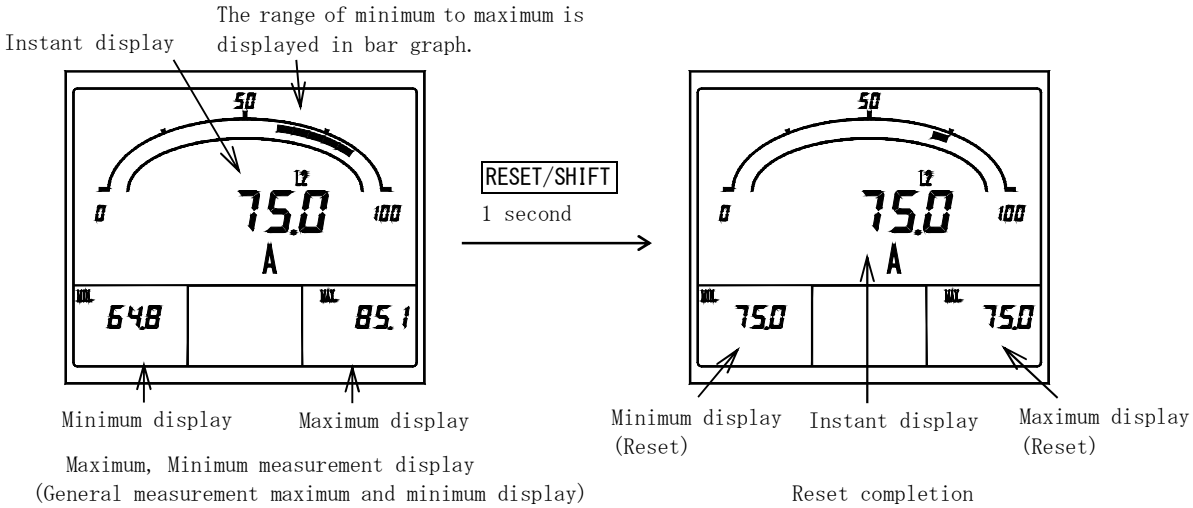

b) Package reset
Reset of all the maximum values and minimum value is performed.
In addition, setting can perform same operation in external operation input.
Please refer to "5.3.2 Setting mode 2 (4) external operation input setting" for the setting method,
Please refer to "6.3 Option" for the external operation input,

① Press RESET/SHIFT and + together for longer than 1 seconds. By the maximum and the minimum measurement display (The general measurement maximum and minimum display or current, voltage harmonic measurement maximum display).

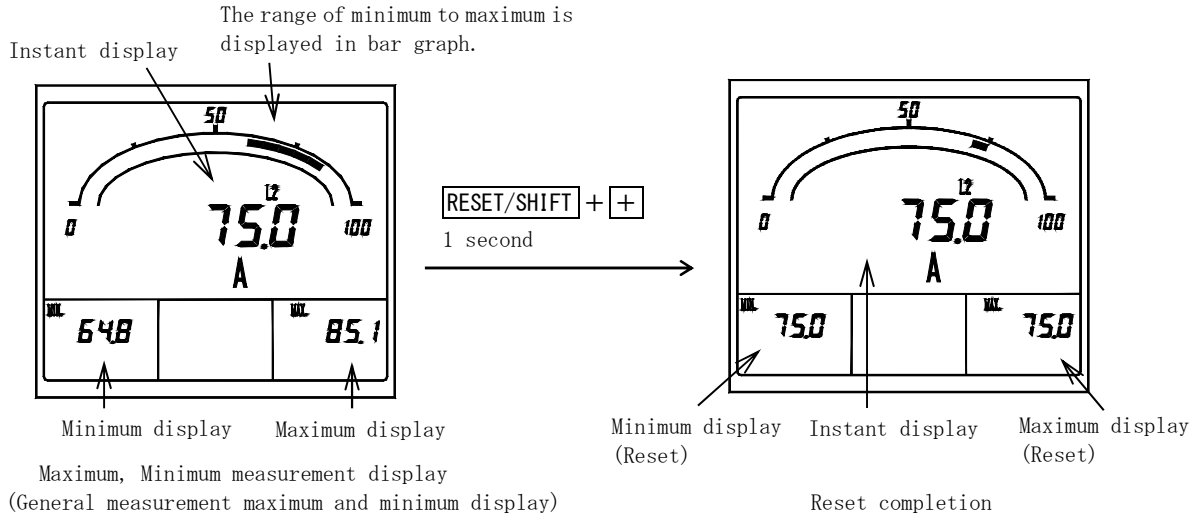

<Caution> In the general measurement maximum and minimum value reset, all the factors of general measurement are reset by package. (The harmonic measurement maximum value is not reset.)
By harmonic measurement maximum value reset, a current factor and a voltage factor are reset by package. (The general measurement maximum value and the minimum value are not reset.)

(3) Alarm reset

In case an alarm return method is set to “HOLD (manual return)”, an alarm output is reset (output OFF). (With an alarm-output option)

However, an output is not turned off by this operation, in case an alarm continues and it has caused.

And, this operation is unnecessary in case setting as "AUTO (automatic return)” in alarm return method. (By which an output is also OFF according to an alarm return.)

In case the number of alarm outputs is two, both outputs are reset (output OFF) by this operation. (Return operation that comes out individually cannot be performed.)

In addition, setting can perform same operation in external operation input.

Please refer to "5.3.2 Setting mode 2 (4) external operation input setting" for the setting method,

Please refer to "6.3 Option" for the external operation input,

① By instant measurement display (a general measurement display or current, voltage harmonic measurement display), RESET/SHIFT is pushed 1 second or more.

<Caution> If this operation is performed by the maximum and the minimum measurement display, the maximum value and minimum value of the measurement factor currently displayed will be reset.
Please be sure to perform this operation in the state of an instant measurement display.

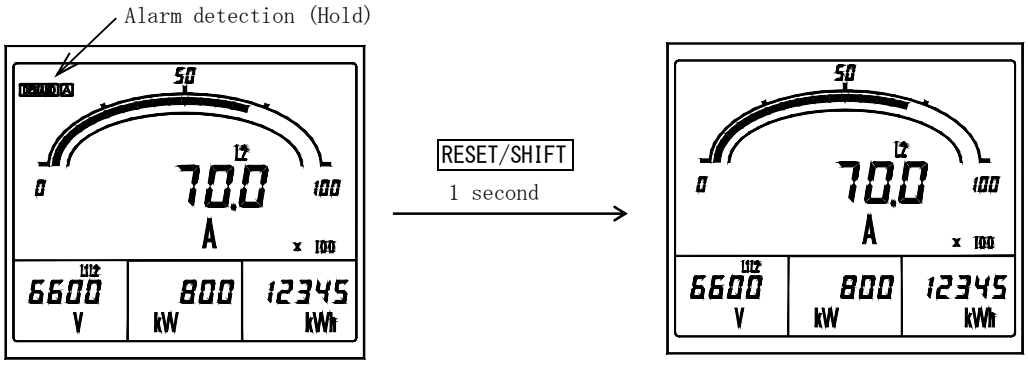

Instant measurement display
(General measurement display)

Reset completion

5. Setting

< Caution >

When changing the input circuit setting, please be sure to perform a setup from an input circuit setting in the setting mode 3. After changing the other setting, when the input circuit setting is changed the set value returns to default value (default value of a changed input circuit).

5.1 Function table

This product has each function setting with a front switch.

<Caution> In case the input circuit is not designated at the case of an order, it is shipping in the default value of 3-phase 3-wire.

Setting mode 1. Function table (1)

Setting No.	Function	Functional description	Current input	Voltage input	Default setting		Important setting	Page
111	Display pattern	Set the display combination pattern of the digital 4 displays and bar graph display.	○	○	Pattern 1		○	47-51
112	Main monitor	Set the display factor of digital main monitor.	○	○	3φ3W	A(L2)	○	47-51
					1φ3W	A(L1)		
					1φ2W	A		
113	Sub-monitor (Left)	Set the display factor of digital sub-monitor (left).	○	○	3φ3W	V(L1L2)	○	47-51
					1φ3W	V(L1N)		
					1φ2W	V		
114	Sub-monitor (Center)	Set the display factor of digital sub-monitor (center).	○	○	W		○	47-51
115	Sub-monitor (Right)	Set the display factor of digital sub-monitor (right).	○	○	Wh		○	47-51
116	Bar graph	Set the display factor of bar graph.	○	○	3φ3W	A(L2)	○	47-51
					1φ3W	A(L1)		
					1φ2W	A		
121AL (23)	Alarm 1 factor	Set the output factor of alarm 1.	○	○	DA		○	52
122AL (23)	Alarm 1 return method	Set the output action at the case of reset of alarm 1.	○	○	Automatic reset			52
123AL (23)	Alarm 1 mask time (Contact delay time)	Set the contact delay time of alarm 1.	○	○	0 second			52
124AL (23)	Alarm 1 test	Output test of alarm 1 is performed.	○	○	－			52
125AL (23)	Alarm 2 factor	Set the output factor of alarm 2.	○	○	DA		○	52
126AL (23)	Alarm 2 return method	Set the output action at the case of reset of alarm 2.	○	○	Automatic reset			52
127AL (23)	Alarm 2 mask time (Contact delay time)	Set the contact delay time of alarm 2.	○	○	0 second			52
128AL (23)	Alarm 2 test	Output test of alarm 2 is performed.	○	○	－			52
131H	Demand current upper limit	Sets the high-alarm value of demand current.	○		80% (Full scale＝100%)			53,54
132	Demand current time interval	Set time interval of demand current.	○		0 second		○	53,54
133H	Demand active power upper limit	Set the high-alarm value of demand active power.			OFF (No operation)			53,54

Note(23) A setting item is not displayed in case there is no corresponding option.

Setting mode 1. Function table (2)

Setting No.	Function	Functional description	Current input	Voltage input	Default setting	Important setting	Page
134	Demand active power time interval	Set the time interval of demand active power.			0 second	○	53,54
135	Demand active power operating method	Set the operating method of demand active power.			Operating system according with bimetallic type.	○	53,54
136	Power-factor operating method	Set the operating method of power-factor measurement.			Instant measurement		53,54
141H	Current distortion-factor upper limit	Set the high-alarm value of current distortion factor.	○		OFF (No operation)		54,55
142H	Current 5th conversion content upper limit	Set the high-alarm value of current 5th conversion content.	○		OFF (No operation)		54,55
143	Current n-th content factor	Set the order of n-th current content.	○		5th		54,55
144H	Current n-th content upper limit	Set the high-alarm value of current n-th content.	○		OFF (No operation)		54,55
145H	Voltage distortion-factor upper limit	Set this high-alarm value of voltage distortion factor.		○	OFF (No operation)		54,55
146H	Voltage 5th conversion content upper limit	Set the high-alarm value of voltage 5th conversion content.		○	OFF (No operation)		54,55
147	Voltage n-th content factor	Set the order of n-th voltage content.		○	5th		54,55
148H	Voltage n-th content upper limit	Set the high-alarm value of voltage n-th content.		○	OFF (No operation)		54,55
149	5th conversion detection characteristics	Set the detection characteristic of 5th conversion content.	○	○	Inverse-time-delay mode		54,55
14A	Average value time interval	Set the average value detection time interval of harmonic.	○	○	0 minute		54,55
151H	Instant measurement voltage upper limit	Set the high-alarm value of instant voltage.		○	OFF (No operation)		55
152L	Instant measurement voltage lower limit	Set the low-alarm value of instant voltage.		○	OFF (No operation)		55
161 (24)	Leakage detection rated sensitivity current value	Set the rated sensitivity current value of current leakage.	○	○	0.1A		56
162 (24) (25)	Leakage detection factor change	Set the factor of the current leakage that performs leakage detection.	○	○	Io		56
163 (24)	Leakage detect-circuitry change	Set the circuit configuration at the time that 3-phase 3-wire performs leakage detection.	○	○	One phase earth		56
164 (24)	Selection of ZCT used	Sets the ZCT used by current-leakage measurement.	○	○	TYPE 0		56
171	Backlight action	Set the ON/OFF of backlight.	○	○	AUTO OFF		57
172	Backlight brightness	Set the brightness of backlight.	○	○	3 (Middle)		57

Note(24) A setting item is not displayed in case there is no corresponding option.
Note(25) Current input product are only Io detection. Igr detection cannot be performed.

Setting mode 2. Function table (1)

Setting No.	Function	Functional description	Current input	Voltage input	Default setting		Important setting	Page
211	Voltage range	Set the voltage-measurement range (VT ratio).		○	3φ3W	6600V (27)	○	58-60
					1φ3W	110.0V		
					1φ2W	3300V (27)		
212	Current range	Set the current-measurement range (CT ratio).	○		3φ3W	100.0A	○	58-60
					1φ3W	500A		
					1φ2W	50.0A		
213	Current display peculiar sensitivity	Set the full scale of current meter.	○		3φ3W	100.0A		58-60
					1φ3W	500A		
					1φ2W	50.0A		
214	Active power polarity	Set the swing display of active power meter.			One-side swing			58-60
215	Active power range	Set the full scale of active power meter.			3φ3W	1200kW (28)		58-60
					1φ3W	100.0kW		
					1φ2W	150.0kW (28)		
216	Reactive power range	Set the full scale of reactive power meter.			3φ3W	600kvar (28)		58-60
					1φ3W	50.0kvar		
					1φ2W	75.0kvar (28)		
217	Power-factor range	Set the full scale of power-factor meter. And, set this output range of analog output.			0.500 - 1.000 - 0.500			58-60
218	Frequency range	Set the full scale of frequency meter. And, set this output range of analog output.		○	45.0 - 65.0Hz			58-60
221A (26)	A01 output factor	Set the output factor of A01 (analog output 1).	○	○	3φ3W	A(L2)	○	61,62
					1φ3W	A(L1)		
					1φ2W	A		
222A (26)	A02 output factor	Set the output factor of A02 (analog output 2).	○	○	3φ3W	V(L1L2)	○	61,62
					1φ3W	V(L1N)		
					1φ2W	V		
223A (26)	A03 output factor	Set the output factor of A03 (analog output 3).	○	○	W		○	61,62
224A (26)	A04 output factor	Set the output factor of A04 (analog output 4).	○	○	cosφ		○	61,62
225A (26)	Current output peculiar sensitivity	Set the analog output sensitivity (% of output for input) of current.	○		100.0%			61,62
226A (26)	Active power-output peculiar sensitivity	Set the analog output sensitivity (% of output for input) of active power.			100.0%			61,62
227A (26)	Reactive power output peculiar sensitivity	Set the analog output sensitivity (% of output for input) of reactive power.			50.0%			61,62
228A (26)	Low input cut	Set the function which makes a lower limit the output at the case of a minute input (adequate to 0.5% or less) in analog output.	○	○	OFF (No operation)			61,62

Note(26) A setting item is not displayed in case there is no corresponding option.
Note(27) In 220V input, it becomes "220V".
Note(28) In 220V input, It becomes "40.0kW" and "20.00kvar" (3φ3W).
In 220V input, It becomes "10.00kW" and "5.00kvar" (1φ2W).

Setting mode 2. Function table (2)

Setting No.	Function	Functional description	Current input	Voltage input	Default setting		Important setting	Page
241P (29)	PO1 factor	Set the output factor of PO1 (pulse output 1).			Wh		○	62
242P (29) (30)	PO1 pulse unit	Set the output pulse unit of PO1 (pulse output 1).			3φ3W	10kWh/p		62
					1φ3W 1φ2W	1kWh/p		
243P (29)	PO2 factor	Set the output factor of PO2 (pulse output 2).			Wh		○	62
244P (29) (30)	PO2 pulse unit	Set the output pulse unit of PO2 (pulse output 2).			3φ3W	10kWh/p		62
					1φ3W 1φ2W	1kWh/p		
251 (29)	External operation input 1 function	Set the function of the external operation input 1.	○	○	Alarm reset		○	63
252 (29)	External operation input 2 function	Set the function of the external operation input 2.	○	○	Maximum / Minimum reset		○	63
261	Voltage ON/OFF	Set the ON/OFF of voltage measurement display.		○	ON			64
262	Current ON/OFF	Set the ON/OFF of current measurement display.	○		ON			64
263	Active power ON/OFF	Set the ON/OFF of active power measurement display.			ON			64
264	Reactive power ON/OFF	Set the ON/OFF of reactive power measurement display.			ON			64
265	Power-factor ON/OFF	Set the ON/OFF of power-factor measurement display.			ON			64
266	Frequency ON/OFF	Set the ON/OFF of frequency measurement display.		○	ON			64
267	Power-receiving watt-hour ON/OFF	Set the ON/OFF of power-receiving watt-hour measurement display.			ON			64
268	Power transmission watt-hour ON/OFF	Set the ON/OFF of power transmission watt-hour measurement display.			ON			64
269	Power-receiving var-hour (LAG,LEAD) ON/OFF	Set the ON/OFF of power-receiving var-hour (LAG,LEAD) measurement display.			ON			64
26A	Power transmission var-hour (LAG,LEAD) ON/OFF	Set the ON/OFF of power transmission var-hour (LAG,LEAD) measurement display.			ON			64
26B	Harmonic current ON/OFF	Set the ON/OFF of harmonic current measurement display.	○		ON			64
26C	Harmonic voltage ON/OFF	Set the ON/OFF of harmonic voltage measurement display.		○	ON			64
26D (29)	Current leakage ON/OFF	Set the ON/OFF of current-leakage measurement display.	○	○	ON			64
271	set value initialization	All set values are initialized. (Return to default setting)	○	○	—			64
272	Watt-hour reset	Integrated value is cleared by package about each electric energy.			—			64

Note(29) A setting item is not displayed in case there is no corresponding option.
Note(30) In 220V input, it becomes "0.1kWh/p". (3φ3W、1φ2W)

Setting mode 3. Function table

Setting No.	Function	Functional description	Current input	Voltage input	Default setting		Important setting	Page
311	Input circuit phase line change	Set the input circuit or phase line.	○	○	3φ3W	3φ3W	○	66
					1φ3W	1φ3W (L1-N-L3)		
					1φ2W	1φ2W		
312	Input voltage	Set the input voltage or phase-voltage full scale.		○	3φ3W	110V	○	66
					1φ3W	300V		
					1φ2W	110V		
321	Measurement dead band	Set the dead band of measurement display.	○	○	0.0%			67
322	Tidal current measurement	Set the general measurement or tidal current measurement which was conscious of power transmission / power receiving, in measurement of reactive power and power-factor.			General measurement			67
331 (31) (32)	Analog output specification	Set the analog output specification.	○	○	DC1 - 5V or DC0 - 5V (Designation)			68
341 (31)	A01 BIAS adjustment	Set the BIAS value of A01 (Analog output 1).	○	○	0.0%			68
342 (31)	A01 SPAN adjustment	Set the SPAN value of A01 (Analog output 1).	○	○	100.0%			68
343 (31)	A02 BIAS adjustment	Set the BIAS value of A02 (Analog output 2).	○	○	0.0%			68
344 (31)	A02 SPAN adjustment	Set the SPAN value of A02 (Analog output 2).	○	○	100.0%			68
345 (31)	A03 BIAS adjustment	Set the BIAS value of A03 (Analog output 3).	○	○	0.0%			68
346 (31)	A03 SPAN adjustment	Set the SPAN value of A03 (Analog output 3).	○	○	100.0%			68
347 (31)	A04 BIAS adjustment	Set the BIAS value of A04 (Analog output 4).	○	○	0.0%			68
348 (31)	A04 SPAN adjustment	Set the SPAN value of A04 (Analog output 4).	○	○	100.0%			68

Note(31) A setting item is not displayed in case there is no corresponding option.

Note(32) A setting item is not displayed if analog output is except DC0 - 5V (or DC1 - 5V) specification, And analog output insulation product does not display a setting item.

5.2 Setting table

A setting item changes by the specification of a product, or the existence of an option.

(1) Important setting

Each parenthesized number shows a setting number and this number is displayed on the setting screen.

Items	Setting and operation procedures	Page
Set the measurement range of voltmeter (211)	Press [SET] and [RESET/SHIFT] together for longer than 3 seconds ➡ (211) Select a measurement range by [+] and [−] ➡ Press [SET] ➡ Selected measurement range is entered ➡ Press [DISPLAY] ➡ Returns to display mode.	58-60
Set the measurement range of ammeter (212)	Press [SET] and [RESET/SHIFT] together for longer than 3 seconds ➡ Press [RESET/SHIFT] ➡ (211) (212) Select a measuring range by [+] and [−] ➡ Press [SET] ➡ Selected measuring range is entered ➡ Press [DISPLAY] ➡ Returns to display mode.	58-60
Set the display combination (111)	Press [SET] for longer than 3 seconds ➡ Select the display combination by [+] and [−] ➡ (111) Press [SET] ➡ Selected display combination is entered ➡ Press [DISPLAY] ➡ Returns to display mode.	47-51
Set the output factor of analog output 1 (AO1). (221A)	Press [SET] and [RESET/SHIFT] together for longer than 3 seconds ➡ Press [MODE] ➡ (211) (221A) Select an output factor by [+] and [−] ➡ Press [SET] ➡ Selected output factor is entered ➡ Press [DISPLAY] ➡ Returns to display mode.	61, 62
Set the output factor of analog output 2 (AO2). (222A)	Press [SET] and [RESET/SHIFT] together for longer than 3 seconds ➡ Press [MODE] ➡ (211) (221A) Press [RESET/SHIFT] ➡ Select an output factor by [+] and [−] ➡ Press [SET] ➡ (222A) Selected output factor is entered ➡ Press [DISPLAY] ➡ Returns to display mode.	61, 62
Set the output factor of analog output 3 (AO3). (223A)	Press [SET] and [RESET/SHIFT] together for longer than 3 seconds ➡ Press [MODE] ➡ (211) (221A) Press [RESET/SHIFT] ➡ Press [RESET/SHIFT] ➡ Select an output factor by [+] and [−] ➡ (222A) (223A) Press [SET] ➡ Selected output factor is entered ➡ Press [DISPLAY] ➡ Returns to display mode.	61, 62
Set the output factor of analog output 4 (AO4). (224A)	Press [SET] and [RESET/SHIFT] together for longer than 3 seconds ➡ Press [MODE] ➡ (211) (221A) Press [RESET/SHIFT] ➡ Press [RESET/SHIFT] ➡ Press [RESET/SHIFT] ➡ (222A) (223A) (224A) Select an output factor by [+] and [−] ➡ Press [SET] ➡ Selected output factor is entered ➡ Press [DISPLAY] ➡ Returns to display mode.	61, 62
Set the output factor of pulse output 1 (PO1). (241P)	Press [SET] and [RESET/SHIFT] together for longer than 3 seconds ➡ Press [MODE] ➡ (211) (221A) Press [MODE] ➡ Select an output factor by [+] and [−] ➡ Press [SET] ➡ (241P) Selected output factor is entered ➡ Press [DISPLAY] ➡ Returns to display mode.	62
Set the output factor of pulse output 2 (PO2). (243P)	Press [SET] and [RESET/SHIFT] together for longer than 3 seconds ➡ Press [MODE] ➡ (211) (221A) Press [MODE] ➡ Press [RESET/SHIFT] ➡ Press [RESET/SHIFT] ➡ (241P) (242P) (243P) Select an output factor by [+] and [−] ➡ Press [SET] ➡ Selected output factor is entered ➡ Press [DISPLAY] ➡ Returns to display mode.	62

Items	Setting and operation procedures	Page
Set the factor of alarm output 1. (121AL)	Press [SET] for longer than 3 seconds ➡ Press [MODE] ➡ (111) (121AL) Select an output factor by [+] and [−] ➡ Press [SET] ➡ Selected factor is entered ➡ Press [DISPLAY] ➡ Returns to display mode.	52
Set the factor of alarm output 2. (125AL)	Press [SET] for longer than 3 seconds ➡ Press [MODE] ➡ Press [RESET/SHIFT] ➡ (111) (121AL) (122AL) Press [RESET/SHIFT] ➡ Press [RESET/SHIFT] ➡ Press [RESET/SHIFT] ➡ (123AL) (124AL) (125AL) Select an factor by [+] and [−] ➡ Press [SET] ➡ Selected factor is entered ➡ Press [DISPLAY] ➡ Returns to display mode.	52
Set the external operation input 1 function. (251)	Press [SET] and [RESET/SHIFT] together for longer than 3 seconds ➡ Press [MODE] ➡ (211) (221A) Press [MODE] ➡ Press [MODE] ➡ Select an function by [+] and [−] ➡ Press [SET] ➡ (241P) (251) Selected function is entered ➡ Press [DISPLAY] ➡ Returns to display mode.	63
Set the external operation input 2 function. (252)	Press [SET] and [RESET/SHIFT] together for longer than 3 seconds ➡ Press [MODE] ➡ (211) (221A) Press [MODE] ➡ Press [MODE] ➡ Press [RESET/SHIFT] ➡ Select an function by [+] and [−] ➡ (241P) (251) (252) Press [SET] ➡ Selected function is entered ➡ Press [DISPLAY] ➡ Returns to display mode.	63
Set the time interval of demand current. (132)	Press [SET] for longer than 3 seconds ➡ Press [MODE] ➡ Press [MODE] ➡ Press [RESET/SHIFT] ➡ (111) (121AL) (131H) Select an time interval by [+] and [−] ➡ Press [SET] ➡ (132) Selected time interval is entered ➡ Press [DISPLAY] ➡ Returns to display mode.	53, 54
Set the time interval of demand active power. (134)	Press [SET] for longer than 3 seconds ➡ Press [MODE] ➡ Press [MODE] ➡ Press [RESET/SHIFT] ➡ (111) (121AL) (131H) Press [RESET/SHIFT] ➡ Press [RESET/SHIFT] ➡ Select an time interval by [+] and [−] ➡ (132) (133H) (134) Press [SET] ➡ Selected time interval is entered ➡ Press [DISPLAY] ➡ Returns to display mode.	53, 54
Set the operation method of demand active power. (135)	Press [SET] for longer than 3 seconds ➡ Press [MODE] ➡ Press [MODE] ➡ Press [RESET/SHIFT] ➡ (111) (121AL) (131H) Press [RESET/SHIFT] ➡ Press [RESET/SHIFT] ➡ Press [RESET/SHIFT] ➡ (132) (133H) (134) (135) Select an operation method by [+] and [−] ➡ Press [SET] ➡ Selected operation method is entered ➡ Press [DISPLAY] ➡ Returns to display mode.	53, 54
Set the phase wire of input circuit. (311)	Press [SET] and [DISPLAY] together for longer than 3 seconds ➡ (311) Select an phase wire by [+] and [−] ➡ Press [SET] ➡ Selected phase wire is entered ➡ Press [DISPLAY] ➡ Returns to display mode.	66
Set the input voltage (phase-voltage full scale). (312)	Press [SET] and [DISPLAY] together for longer than 3 seconds ➡ Press [RESET/SHIFT] ➡ (311) (312) Select an input voltage (In case of 1φ3W, it is phase-voltage full scale) by [+] and [−] ➡ Press [SET] ➡ Selected input voltage is entered ➡ Press [DISPLAY] ➡ Returns to display mode.	66

(2) A combination except a display pattern.
Each parenthesized number shows a setting number and this number is displayed on the setting screen.

Items	Setting and operation procedures	Page
Set the display factor of main monitor. (112)	Press SET for longer than 3 seconds ➡ Press RESET/SHIFT ➡ (111) (112) Select an display factor by + and − ➡ Press SET ➡ Selected display factor is entered ➡ Press DISPLAY ➡ Returns to display mode.	47-51
Set the display factor of sub-monitor (left). (113)	Press SET for longer than 3 seconds ➡ Press RESET/SHIFT ➡ Press RESET/SHIFT ➡ (111) (112) (113) Select an display factor by + and − ➡ Press SET ➡ Selected display factor is entered ➡ Press DISPLAY ➡ Returns to display mode.	47-51
Set the display factor of sub-monitor (center). (114)	Press SET for longer than 3 seconds ➡ Press RESET/SHIFT ➡ Press RESET/SHIFT ➡ (111) (112) (113) Press RESET/SHIFT ➡ Select an display factor by + and − ➡ Press SET ➡ (114) Selected display factor is entered ➡ Press DISPLAY ➡ Returns to display mode.	47-51
Set the display factor of sub-monitor (right). (115)	Press SET for longer than 3 seconds ➡ Press RESET/SHIFT ➡ Press RESET/SHIFT ➡ (111) (112) (113) Press RESET/SHIFT ➡ Press RESET/SHIFT ➡ Select an display factor by + and − ➡ (114) (115) Press SET ➡ Selected display factor is entered ➡ Press DISPLAY ➡ Returns to display mode.	47-51
Set the display factor of bar graph. (116)	Press SET for longer than 3 seconds ➡ Press RESET/SHIFT ➡ Press RESET/SHIFT ➡ (111) (112) (113) Press RESET/SHIFT ➡ Press RESET/SHIFT ➡ Press RESET/SHIFT ➡ (114) (115) (116) Select an display factor by + and −(If a sub-monitor is selected, an underbar will be displayed on the bottom of a digital display.) ➡ Press SET ➡ Selected display factor is entered ➡ Press DISPLAY ➡ Returns to display mode.	47-51

(3) Setting of active power polarity and measurement range.
Each parenthesized number shows a setting number and this number is displayed on the setting screen.

Items	Setting and operation procedures	Page
Setting of measurement range of active power. (214), (215)	Press SET and RESET/SHIFT together for longer than 3 seconds ➡ Press RESET/SHIFT ➡ (211) (212) Press RESET/SHIFT ➡ Press RESET/SHIFT ➡ (213) (214) Select an one-side(P)/both-side(-) deflection by + and − ➡ Press SET ➡ Selected deflection is entered ➡ Press RESET/SHIFT ➡ (215) Select a measuring range by + and − ➡ Press SET ➡ Selected measuring range is entered ➡ Press DISPLAY ➡ Returns to display mode.	58-60

(4) Setting of reactive power measurement range.
Each parenthesized number shows a setting number and this number is displayed on the setting screen.

Items	Setting and operation procedures	Page
Setting of measurement range of reactive power. (216)	Press [SET] and [RESET/SHIFT] together for longer than 3 seconds ➡ Press [RESET/SHIFT] ➡ (211) (212) Press [RESET/SHIFT] ➡ Press [RESET/SHIFT] ➡ Press [RESET/SHIFT] ➡ Press [RESET/SHIFT] ➡ (213) (214) (215) (216) Select a measuring range by [+] and [−] ➡ Press [SET] ➡ Selected measuring range is entered ➡ Press [DISPLAY] ➡ Returns to display mode.	58-60

(5) Setting of Wh (varh) output pulse unit.
Each parenthesized number shows a setting number and this number is displayed on the setting screen.

Items	Setting and operation procedures	Page
Set the pulse unit of pulse output 1 (Po1). (242P)	Press [SET] and [RESET/SHIFT] together for longer than 3 seconds ➡ Press [MODE] ➡ (211) (221A) Press [MODE] ➡ Press [RESET/SHIFT] ➡ Select a output pulse unit by [+] and [−] ➡ (241P) (242P) Press [SET] ➡ Selected output pulse unit is entered ➡ Press [DISPLAY] ➡ Returns to display mode.	62
Set the pulse unit of pulse output 2 (Po2). (244P)	Press [SET] and [RESET/SHIFT] together for longer than 3 seconds ➡ Press [MODE] ➡ (211) (221A) Press [MODE] ➡ Press [RESET/SHIFT] ➡ Press [RESET/SHIFT] ➡ Press [RESET/SHIFT] ➡ (241P) (242P) (243P) (244P) Select a output pulse unit by [+] and [−] ➡ Press [SET] ➡ Selected output pulse unit is entered ➡ Press [DISPLAY] ➡ Returns to display mode.	62

(6) Setting of active power-factor and frequency measurement range
Each parenthesized number shows a setting number and this number is displayed on the setting screen.

Items	Setting and operation procedures	Page
Set the measurement range of active power-factor. (217)	Press [SET] and [RESET/SHIFT] together for longer than 3 seconds ➡ Press [RESET/SHIFT] ➡ (211) (212) Press [RESET/SHIFT] ➡ Press [RESET/SHIFT] ➡ Press [RESET/SHIFT] ➡ Press [RESET/SHIFT] ➡ (213) (214) (215) (216) Press [RESET/SHIFT] ➡ Select a measuring range by [+] and [−] ➡ Press [SET] ➡ (217) Selected measuring range is entered ➡ Press [DISPLAY] ➡ Returns to display mode.	58-60
Set the measurement range of frequency. (218)	Press [SET] and [RESET/SHIFT] together for longer than 3 seconds ➡ Press [RESET/SHIFT] ➡ (211) (212) Press [RESET/SHIFT] ➡ Press [RESET/SHIFT] ➡ Press [RESET/SHIFT] ➡ Press [RESET/SHIFT] ➡ (213) (214) (215) (216) Press [RESET/SHIFT] ➡ Press [RESET/SHIFT] ➡ Select a measuring range by [+] and [−] ➡ (217) (218) Press [SET] ➡ Selected measuring range is entered ➡ Press [DISPLAY] ➡ Returns to display mode.	58-60

(7) Setting of current display intrinsic sensitivity.
Each parenthesized number shows a setting number and this number is displayed on the setting screen.

Items	Setting and operation procedures	Page
Set the display sensitivity (% of a display to an input) of current. (213)	Press [SET] and [RESET/SHIFT] together for longer than 3 seconds ➡ Press [RESET/SHIFT] ➡ (211) (212) Press [RESET/SHIFT] ➡ Select a display sensitivity by [+] and [−] ➡ Press [SET] ➡ (213) Selected display sensitivity is entered ➡ Press [DISPLAY] ➡ Returns to display mode.	58-60

(8) Setting of analog output.
Each parenthesized number shows a setting number and this number is displayed on the setting screen.

Items	Setting and operation procedures	Page
Set the analog output sensitivity (% of an output to an input) of current. (225A)	Press [SET] and [RESET/SHIFT] together for longer than 3 seconds ➡ Press [MODE] ➡ (211) (221A) Press [RESET/SHIFT] ➡ Press [RESET/SHIFT] ➡ Press [RESET/SHIFT] ➡ Press [RESET/SHIFT] ➡ (222A) (223A) (224A) (225A) Select a output sensitivity by [+] and [−] ➡ Press [SET] ➡ Selected output sensitivity is entered ➡ Press [DISPLAY] ➡ Returns to display mode.	61, 62
Set the analog output sensitivity (% of an output to an input) of active power. (226A)	Press [SET] and [RESET/SHIFT] together for longer than 3 seconds ➡ Press [MODE] ➡ (211) (221A) Press [RESET/SHIFT] ➡ Press [RESET/SHIFT] ➡ Press [RESET/SHIFT] ➡ Press [RESET/SHIFT] ➡ (222A) (223A) (224A) (225A) Press [RESET/SHIFT] ➡ Select a output sensitivity by [+] and [−] ➡ Press [SET] ➡ (226A) Selected output sensitivity is entered ➡ Press [DISPLAY] ➡ Returns to display mode.	61, 62
Set the analog output sensitivity (% of an output to an input) of reactive power. (227A)	Press [SET] and [RESET/SHIFT] together for longer than 3 seconds ➡ Press [MODE] ➡ (211) (221A) Press [RESET/SHIFT] ➡ Press [RESET/SHIFT] ➡ Press [RESET/SHIFT] ➡ Press [RESET/SHIFT] ➡ (222A) (223A) (224A) (225A) Press [RESET/SHIFT] ➡ Press [RESET/SHIFT] ➡ Select a output sensitivity by [+] and [−] ➡ Press [SET] ➡ Selected output sensitivity is entered ➡ Press [DISPLAY] ➡ (226A) (227A) Returns to display mode.	61, 62
Set the output cut function at the case in minute input (0.5% or less). (At the case of analog output) (228A)	Press [SET] and [RESET/SHIFT] together for longer than 3 seconds ➡ Press [MODE] ➡ (211) (221A) Press [RESET/SHIFT] ➡ Press [RESET/SHIFT] ➡ Press [RESET/SHIFT] ➡ Press [RESET/SHIFT] ➡ (222A) (223A) (224A) (225A) Press [RESET/SHIFT] ➡ Press [RESET/SHIFT] ➡ Press [RESET/SHIFT] ➡ (226A) (227A) (228A) Select a low Input cut ON/OFF by [+] and [−] ➡ Press [SET] ➡ Selected action is entered ➡ Press [DISPLAY] ➡ Returns to display mode.	61, 62

(9) Setting of alarm output.
Each parenthesized number shows a setting number and this number is displayed on the setting screen.

Items	Setting and operation procedures	Page
Set the return method of alarm output 1. (122AL)	Press [SET] for longer than 3 seconds ➡ Press [MODE] ➡ Press [RESET/SHIFT] ➡ (111) (121AL) (122AL) Select a return method by [+] and [−] ➡ Press [SET] ➡ The selected return method is entered ➡ Press [DISPLAY] ➡ Returns to display mode.	52
Set the contact delay time of alarm output 1. (123AL)	Press [SET] for longer than 3 seconds ➡ Press [MODE] ➡ Press [RESET/SHIFT] ➡ (111) (121AL) (122AL) Press [RESET/SHIFT] ➡ Select an contact delay time by [+] and [−] ➡ Press [SET] ➡ (123AL) The selected contact delay time is entered ➡ Press [DISPLAY] ➡ Returns to display mode.	52
Set the return method of alarm output 2. (126AL)	Press [SET] for longer than 3 seconds ➡ Press [MODE] ➡ Press [RESET/SHIFT] ➡ (111) (121AL) (122AL) Press [RESET/SHIFT] ➡ Press [RESET/SHIFT] ➡ Press [RESET/SHIFT] ➡ Press [RESET/SHIFT] ➡ (123AL) (124AL) (125AL) (126AL) Select a return method by [+] and [−] ➡ Press [SET] ➡ The selected return method is entered ➡ Press [DISPLAY] ➡ Returns to display mode.	52
Set the contact delay time of alarm output 2. (127AL)	Press [SET] for longer than 3 seconds ➡ Press [MODE] ➡ Press [RESET/SHIFT] ➡ (111) (121AL) (122AL) Press [RESET/SHIFT] ➡ Press [RESET/SHIFT] ➡ Press [RESET/SHIFT] ➡ Press [RESET/SHIFT] ➡ (123AL) (124AL) (125AL) (126AL) Press [RESET/SHIFT] ➡ Select an contact delay time by [+] and [−] ➡ Press [SET] ➡ (127AL) The selected contact delay time is entered ➡ Press [DISPLAY] ➡ Returns to display mode.	52

(10) Demand measurement (current, active power) setting.
Each parenthesized number shows a setting number and this number is displayed on the setting screen.

Items	Setting and operation procedures	Page
Set the high-alarm value of demand current. (131H)	Press [SET] for longer than 3 seconds ➡ Press [MODE] ➡ Press [MODE] ➡ (111) (121AL) (131H) Select a high-alarm value by [+] and [−] ➡ Press [SET] ➡ Selected high-alarm value is entered ➡ Press [DISPLAY] ➡ Returns to display mode.	53, 54
Set the high-alarm value of demand active power. (133H)	Press [SET] for longer than 3 seconds ➡ Press [MODE] ➡ Press [MODE] ➡ Press [RESET/SHIFT] ➡ (111) (121AL) (131H) Press [RESET/SHIFT] ➡ Select a high-alarm value by [+] and [−] ➡ Press [SET] ➡ (132) (133H) Selected high-alarm value is entered ➡ Press [DISPLAY] ➡ Returns to display mode.	53, 54
Set the operation method of power-factor measurement. (136)	Press [SET] for longer than 3 seconds ➡ Press [MODE] ➡ Press [MODE] ➡ Press [RESET/SHIFT] ➡ (111) (121AL) (131H) Press [RESET/SHIFT] ➡ Press [RESET/SHIFT] ➡ Press [RESET/SHIFT] ➡ Press [RESET/SHIFT] ➡ (132) (133H) (134) (135) Select a operation method by [+] and [−] ➡ Press [SET] ➡ (136) Selected operation method is entered ➡ Press [DISPLAY] ➡ Returns to display mode.	53, 54

(11) Harmonic measurement setting

Each parenthesized number shows a setting number and this number is displayed on the setting screen.

Items	Setting and operation procedures	Page
Set the high-alarm value of current distortion factor. (141H)	Press [SET] for longer than 3 seconds ➡ Press [MODE] (111) ➡ Press [MODE] (121AL) ➡ Press [MODE] (131H) ➡ Press [MODE] (141H) ➡ Select a high-alarm value by [+] and [−] ➡ Press [SET] ➡ Selected high-alarm value is entered ➡ Press [DISPLAY] ➡ Returns to display mode.	54, 55
Set the high-alarm value of 5th current conversion content. (142H)	Press [SET] for longer than 3 seconds ➡ Press [MODE] (111) ➡ Press [MODE] (121AL) ➡ Press [MODE] (131H) ➡ Press [MODE] (141H) ➡ Press [RESET/SHIFT] (142H) ➡ Select a high-alarm value by [+] and [−] ➡ Press [SET] ➡ Selected high-alarm value is entered ➡ Press [DISPLAY] ➡ Returns to display mode.	54, 55
Set the order of n-th current content. (143)	Press [SET] for longer than 3 seconds ➡ Press [MODE] (111) ➡ Press [MODE] (121AL) ➡ Press [MODE] (131H) ➡ Press [MODE] (141H) ➡ Press [RESET/SHIFT] (142H) ➡ Press [RESET/SHIFT] (143) ➡ Select a order by [+] and [−] ➡ Press [SET] ➡ Selected order is entered ➡ Press [DISPLAY] ➡ Returns to display mode.	54, 55
Set the high-alarm value of n-th current content. (144H)	Press [SET] for longer than 3 seconds ➡ Press [MODE] (111) ➡ Press [MODE] (121AL) ➡ Press [MODE] (131H) ➡ Press [MODE] (141H) ➡ Press [RESET/SHIFT] (142H) ➡ Press [RESET/SHIFT] (143) ➡ Press [RESET/SHIFT] (144H) ➡ Select a high-alarm value by [+] and [−] ➡ Press [SET] ➡ Selected high-alarm value is entered ➡ Press [DISPLAY] ➡ Returns to display mode.	54, 55
Set the high-alarm value of voltage distortion factor. (145H)	Press [SET] for longer than 3 seconds ➡ Press [MODE] (111) ➡ Press [MODE] (121AL) ➡ Press [MODE] (131H) ➡ Press [MODE] (141H) ➡ Press [RESET/SHIFT] (142H) ➡ Press [RESET/SHIFT] (143) ➡ Press [RESET/SHIFT] (144H) ➡ Press [RESET/SHIFT] (145H) ➡ Select a high-alarm value by [+] and [−] ➡ Press [SET] ➡ Selected high-alarm value is entered ➡ Press [DISPLAY] ➡ Returns to display mode.	54, 55
Set the high-alarm value of voltage 5th conversion content. (146H)	Press [SET] for longer than 3 seconds ➡ Press [MODE] (111) ➡ Press [MODE] (121AL) ➡ Press [MODE] (131H) ➡ Press [MODE] (141H) ➡ Press [RESET/SHIFT] (142H) ➡ Press [RESET/SHIFT] (143) ➡ Press [RESET/SHIFT] (144H) ➡ Press [RESET/SHIFT] (145H) ➡ Press [RESET/SHIFT] (146H) ➡ Select a high-alarm value by [+] and [−] ➡ Press [SET] ➡ Selected high-alarm value is entered ➡ Press [DISPLAY] ➡ Returns to display mode.	54, 55
Set the order of n-th voltage content. (147)	Press [SET] for longer than 3 seconds ➡ Press [MODE] (111) ➡ Press [MODE] (121AL) ➡ Press [MODE] (131H) ➡ Press [MODE] (141H) ➡ Press [RESET/SHIFT] (142H) ➡ Press [RESET/SHIFT] (143) ➡ Press [RESET/SHIFT] (144H) ➡ Press [RESET/SHIFT] (145H) ➡ Press [RESET/SHIFT] (146H) ➡ Press [RESET/SHIFT] (147) ➡ Select a order by [+] and [−] ➡ Press [SET] ➡ Selected order is entered ➡ Press [DISPLAY] ➡ Returns to display mode.	54, 55
Set the high-alarm value of n-th voltage content. (148H)	Press [SET] for longer than 3 seconds ➡ Press [MODE] (111) ➡ Press [MODE] (121AL) ➡ Press [MODE] (131H) ➡ Press [MODE] (141H) ➡ Press [RESET/SHIFT] (142H) ➡ Press [RESET/SHIFT] (143) ➡ Press [RESET/SHIFT] (144H) ➡ Press [RESET/SHIFT] (145H) ➡ Press [RESET/SHIFT] (146H) ➡ Press [RESET/SHIFT] (147) ➡ Press [RESET/SHIFT] (148H) ➡ Select a factor by [+] and [−] ➡ Press [SET] ➡ Selected factor is entered ➡ Press [DISPLAY] ➡ Returns to display mode.	54, 55

Items	Setting and operation procedures	Page
Set the detected characteristics of 5th conversion content. (149)	Press [SET] for longer than 3 seconds ➡ Press [MODE] ➡ Press [MODE] ➡ Press [MODE] ➡ (111) (121AL) (131H) (141H) Press [RESET/SHIFT] ➡ Press [RESET/SHIFT] ➡ Press [RESET/SHIFT] ➡ Press [RESET/SHIFT] ➡ (142H) (143) (144H) (145H) Press [RESET/SHIFT] ➡ Press [RESET/SHIFT] ➡ Press [RESET/SHIFT] ➡ Press [RESET/SHIFT] ➡ (146H) (147) (148H) (149) Select a detected characteristics by [+] and [−] ➡ Press [SET] ➡ Selected detected characteristics is entered ➡ Press [DISPLAY] ➡ Returns to display mode.	54, 55
Set the average time interval. (14A)	Press [SET] for longer than 3 seconds ➡ Press [MODE] ➡ Press [MODE] ➡ Press [MODE] ➡ (111) (121AL) (131H) (141H) Press [RESET/SHIFT] ➡ Press [RESET/SHIFT] ➡ Press [RESET/SHIFT] ➡ Press [RESET/SHIFT] ➡ (142H) (143) (144H) (145H) Press [RESET/SHIFT] ➡ Press [RESET/SHIFT] ➡ Press [RESET/SHIFT] ➡ Press [RESET/SHIFT] ➡ (146H) (147) (148H) (149) Press [RESET/SHIFT] ➡ Select a time interval by [+] and [−] ➡ Press [SET] ➡ (14A) Selected time interval is entered ➡ Press [DISPLAY] ➡ Returns to display mode.	54, 55

(12) Instant measurement setting

Each parenthesized number shows a setting number and this number is displayed on the setting screen.

Items	Setting and operation procedures	Page
Set the high-alarm value of instant voltage. (151H)	Press [SET] for longer than 3 seconds ➡ Press [MODE] ➡ Press [MODE] ➡ Press [MODE] ➡ (111) (121AL) (131H) (141H) Press [MODE] ➡ Select a high-alarm value by [+] and [−] ➡ Press [SET] ➡ (151H) Selected high-alarm value is entered ➡ Press [DISPLAY] ➡ Returns to display mode.	55
Set the low-alarm value of instant voltage. (152L)	Press [SET] for longer than 3 seconds ➡ Press [MODE] ➡ Press [MODE] ➡ Press [MODE] ➡ (111) (121AL) (131H) (141H) Press [MODE] ➡ Press [RESET/SHIFT] ➡ Select a low-alarm value by [+] and [−] ➡ (151H) (152L) Press [SET] ➡ Selected low-alarm value is entered ➡ Press [DISPLAY] ➡ Returns to display mode.	55

(13) Current-leakage measurement setting

Each parenthesized number shows a setting number and this number is displayed on the setting screen.

Items	Setting and operation procedures	Page
Set the rated sensitivity current value of current leakage. (161)	Press [SET] for longer than 3 seconds ➡ Press [MODE] ➡ Press [MODE] ➡ Press [MODE] ➡ (111) (121AL) (131H) (141H) Press [MODE] ➡ Press [MODE] ➡ Select a rated sensitivity current by [+] and [−] ➡ (151H) (161) Press [SET] ➡ Selected rated sensitivity current is entered ➡ Press [DISPLAY] ➡ Returns to display mode.	56
Set the detected factor of current leakage. (162)	Press [SET] for longer than 3 seconds ➡ Press [MODE] ➡ Press [MODE] ➡ Press [MODE] ➡ (111) (121AL) (131H) (141H) Press [MODE] ➡ Press [MODE] ➡ Press [RESET/SHIFT] ➡ (151H) (161) (162) Select a detected factor by [+] and [−] ➡ Press [SET] ➡ Selected detected factor is entered ➡ Press [DISPLAY] ➡ Returns to display mode.	56

Items	Setting and operation procedures	Page
Set the leakage detected circuit configuration. (by 3-phase 3-wire) (163)	Press [SET] for longer than 3 seconds ➡ Press [MODE] (111) ➡ Press [MODE] (121AL) ➡ Press [MODE] (131H) ➡ Press [MODE] (141H) ➡ Press [MODE] (151H) ➡ Press [MODE] (161) ➡ Press [RESET/SHIFT] (162) ➡ Press [RESET/SHIFT] (163) ➡ Select a circuit by [+] and [−] ➡ Press [SET] ➡ Selected circuit is entered ➡ Press [DISPLAY] ➡ Returns to display mode.	56
Set the ZCT used by current-leakage measurement. (164)	Press [SET] for longer than 3 seconds ➡ Press [MODE] (111) ➡ Press [MODE] (121AL) ➡ Press [MODE] (131H) ➡ Press [MODE] (141H) ➡ Press [MODE] (151H) ➡ Press [MODE] (161) ➡ Press [RESET/SHIFT] (162) ➡ Press [RESET/SHIFT] (163) ➡ Press [RESET/SHIFT] (164) ➡ Select a ZCT type by [+] and [−] ➡ Press [SET] ➡ Selected ZCT type is entered ➡ Press [DISPLAY] ➡ Returns to display mode.	56

(14) Backlight setting

Each parenthesized number shows a setting number and this number is displayed on the setting screen.

Items	Setting and operation procedures	Page
Set the action of backlight. (171)	Press [SET] for longer than 3 seconds ➡ Press [MODE] (111) ➡ Press [MODE] (121AL) ➡ Press [MODE] (131H) ➡ Press [MODE] (141H) ➡ Press [MODE] (151H) ➡ Press [MODE] (161) ➡ Press [MODE] (171) ➡ Select a backlight action by [+] and [−] ➡ Press [SET] ➡ Selected backlight action is entered ➡ Press [DISPLAY] ➡ Returns to display mode.	57
Set the brightness of backlight. (172)	Press [SET] for longer than 3 seconds ➡ Press [MODE] (111) ➡ Press [MODE] (121AL) ➡ Press [MODE] (131H) ➡ Press [MODE] (141H) ➡ Press [MODE] (151H) ➡ Press [MODE] (161) ➡ Press [MODE] (171) ➡ Press [RESET/SHIFT] (172) ➡ Select a brightness by [+] and [−] ➡ Press [SET] ➡ Selected backlight brightness is entered ➡ Press [DISPLAY] ➡ Returns to display mode.	57

(15) Other, measurement setting

Each parenthesized number shows a setting number and this number is displayed on the setting screen.

Items	Setting and operation procedures	Page
Set the dead band of measurement display. (321)	Press [SET] and [DISPLAY] together for longer than 3 seconds ➡ Press [MODE] (311) ➡ (321) ➡ Select of dead band value in measurement display by [+] and [−] ➡ Press [SET] ➡ The value of dead band in display is entered ➡ Press [DISPLAY] ➡ Returns to display mode.	67
Set the tidal current measurement of reactive power and power-factor. (322)	Press [SET] and [DISPLAY] together for longer than 3 seconds ➡ Press [MODE] (311) ➡ (321) ➡ Press [RESET/SHIFT] (322) ➡ Select a tidal current measurement ON/OFF by [+] and [−] ➡ Press [SET] ➡ Selected action is entered ➡ Press [DISPLAY] ➡ Returns to display mode.	67

5.3 Setting in detail explanation

5.3.1 Setting mode 1

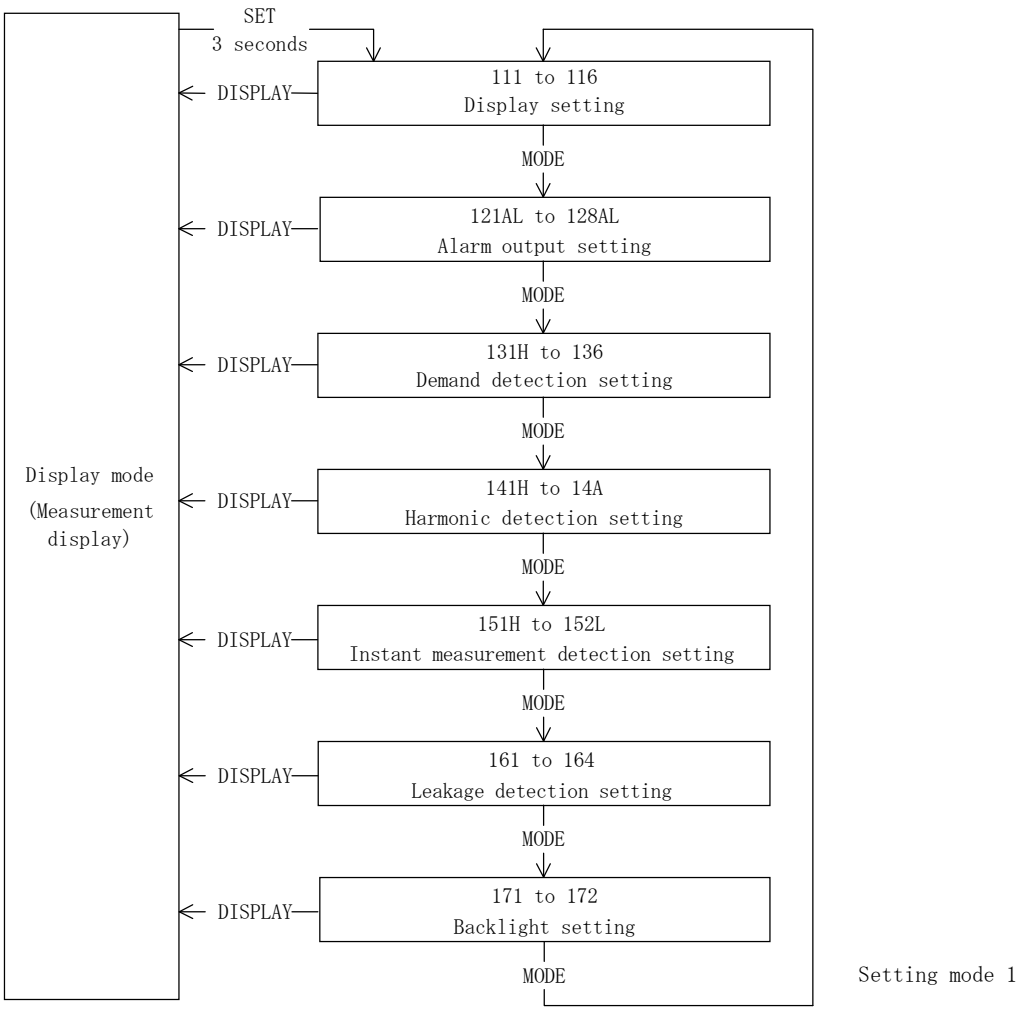

Setting mode 1 is selected by pressing SET switch for longer than 3 seconds.
Pushing MODE switch performs movement of setting item.
The present mode can be returned to the display mode by pressing DISPLAY switch.

< Caution >
If setting change should have been mistaken, an alarm output is not obtained correctly.
Therefore, users must not set. The setting item without the corresponding option is not displayed.

(1) 111 to 116 Display combination setting 【All models】

● 3-phase 3-wire (Voltage, current input) (33) (34)

No.	Pattern No.	Main monitor	Sub-monitor (Left)	Sub-monitor (Center)	Sub-monitor (Right)	Bar graph
1	Pattern 1	A(L2)	V(L1L2)	W	Wh	A(L2)
2	Pattern 2	A(L2)	V(L1L2)	W	cos ϕ	A(L2)
3	Pattern 3	A(L2)	V(L1L2)	W	Hz	A(L2)
4	Pattern 4	DA(L2)	A(L2)	V(L1L2)	W	DA(L2)
5	Pattern 5	DA(L2)	A(L2)	V(L1L2)	Wh	DA(L2)
6	Pattern 6	DA(L2)	V(L1L2)	W	cos ϕ	DA(L2)
7	Pattern 7	W	V(L1L2)	A(L2)	Wh	W
8	Pattern 8	W	V(L1L2)	A(L2)	cos ϕ	W
9	Pattern 9	W	V(L1L2)	A(L2)	Hz	W
10	Pattern 10	DW	V(L1L2)	W	Wh	DW
11	Pattern 11	DW	V(L1L2)	A(L2)	cos ϕ	DW
12	Pattern 12	A(L2)	cos ϕ	W	Wh	A(L2)
13	Pattern 13	A(L2)	var	W	Wh	A(L2)
14	Pattern 14	W	cos ϕ	var	Wh	W
15	Pattern 15	A(L2)	A(L1)	A(L3)	Wh	A(L2)
16	Pattern 16	V(L1L2)	V(L2L3)	V(L3L1)	Hz	V(L1L2)
17	Pattern 17	A(L1)	Io/Igr (35)	V(L1L2)	W	A(L1)
18	Pattern 18	A(L1)	Io/Igr (35)	V(L1L2)	Wh	A(L1)

Note(33) Voltage input is pattern 16 only.
Note(34) Current input is pattern 15 only. (However, sub-monitor (right) is displayed blank.)
Note(35) Io/Igr is only with leakage measurement.

● Displays set factor (3-phase 3-wire)

Main monitor	V(L1L2), V(L2L3), V(L3L1), A(L1), A(L2), A(L3), DA(L1), DA(L2), DA(L3), W, DW, var, cos ϕ, Hz, Io/Igr, Wh, -Wh, varh(LAG), varh(LEAD), -varh(LAG), -varh(LEAD), Distortion factor(A,V)
Sub-monitor (Left)	V(L1L2), V(L2L3), V(L3L1), A(L1), A(L2), A(L3), W, var, cos ϕ, Io/Igr
Sub-monitor (Center)	V(L1L2), V(L2L3), V(L3L1), A(L1), A(L2), A(L3), DA(L1), DA(L2), DA(L3), W, DW, var, varh(LAG), varh(LEAD), -varh(LAG), -varh(LEAD), Harmonic 5th conversion content(A,V), Harmonic nth content(A,V)
Sub-monitor (Right)	V(L1L2), V(L2L3), V(L3L1), A(L1), A(L2), A(L3), DA(L1), DA(L2), DA(L3), W, DW, cos ϕ, Hz, Wh, -Wh, Fundamental-wave effective value(A,V), Harmonic 5th conversion effective value(A,V), Harmonic nth effective value(A,V)
Bar graph	V(L1L2), V(L2L3), V(L3L1), A(L1), A(L2), A(L3), DA(L1), DA(L2), DA(L3), W, DW, var, cos ϕ, Hz, Io/Igr, Distortion factor(A,V), Harmonic 5th conversion content(A,V), Harmonic nth content(A,V), Fundamental-wave effective value(A,V), Harmonic 5th conversion effective value(A,V), Harmonic nth effective value(A,V)

● Phase (line) change (3-phase 3-wire) (36)

→ V(L1L2) → V(L2L3) → V(L3L1) ↩

→ A(L2) → A(L3) → A(L1) ↩

Note(36) Press DISPLAY, Voltage and current are replaced at the same time.

● Measurement factor change (3-phase 3-wire, Measurement display mode)

→ V(L1L2) → V(L2L3) → V(L3L1) → A(L1) → A(L2) → A(L3) → DA(L1) ↩

→ DA(L2) → DA(L3) → W → DW → var → cos ϕ → Hz ↩

→ Io/Igr → Wh → -Wh → varh(LAG) → varh(LEAD) ↩

→ -varh(LAG) → -varh(LEAD) → Nothing ↩

● Measurement factor change (3-phase 3-wire, Harmonic measurement display mode)

Main monitor : Distortion factor (Fixation)
Sub-monitor (Left) : Harmonic order n → 5th conversion → 1 → 3 → 4 → 5 → 7 → 9 → 11 → 13 → 15 ↩
Sub-monitor (Center) : Harmonic nth content (Fixation)
Sub-monitor (Right) : Harmonic nth effective value (Fixation)

● Single-phase 3-wire (Voltage, current input) (37) (38)

No.	Pattern No.	Main monitor	Sub-monitor (Left)	Sub-monitor (Center)	Sub-monitor (Right)	Bar graph
1	Pattern 1	A(L1)	V(L1N)	W	Wh	A(L1)
2	Pattern 2	A(L1)	V(L1N)	W	cos φ	A(L1)
3	Pattern 3	A(L1)	V(L1N)	W	Hz	A(L1)
4	Pattern 4	DA(L1)	A(L1)	V(L1N)	W	DA(L1)
5	Pattern 5	DA(L1)	A(L1)	V(L1N)	Wh	DA(L1)
6	Pattern 6	DA(L1)	V(L1N)	W	cos φ	DA(L1)
7	Pattern 7	W	V(L1N)	A(L1)	Wh	W
8	Pattern 8	W	V(L1N)	A(L1)	cos φ	W
9	Pattern 9	W	V(L1N)	A(L1)	Hz	W
10	Pattern 10	DW	V(L1N)	W	Wh	DW
11	Pattern 11	DW	V(L1N)	A(L1)	cos φ	DW
12	Pattern 12	A(L1)	cos φ	W	Wh	A(L1)
13	Pattern 13	A(L1)	var	W	Wh	A(L1)
14	Pattern 14	W	cos φ	var	Wh	W
15	Pattern 15	A(L1)	A(L3)	A(N)	Wh	A(L1)
16	Pattern 16	V(L1N)	V(L3N)	V(L1L3)	Hz	V(L1N)
17	Pattern 17	A(L1)	Io/Igr (39)	V(L1N)	W	A(L1)
18	Pattern 18	A(L1)	Io/Igr (39)	V(L1N)	Wh	A(L1)

Note(37) Voltage input is pattern 16 only.
Note(38) Current input is pattern 15 only. (However, sub-monitor (right) is displayed blank.)
Note(39) Io/Igr is only with leakage measurement.

● Displays set factor (Single-phase 3-wire)

Main monitor	V(L1N), V(L3N), V(L1L3), A(L1), A(L3), A(N), DA(L1), DA(L3), DA(N), W, DW, var, cos φ, Hz, Io/Igr, Wh, -Wh, varh(LAG), varh(LEAD), -varh(LAG), -varh(LEAD), Distortion factor(A,V)
Sub-monitor (Left)	V(L1N), V(L3N), V(L1L3), A(L1), A(L3), A(N), W, var, cos φ, Io/Igr
Sub-monitor (Center)	V(L1N), V(L3N), V(L1L3), A(L1), A(L3), A(N), DA(L1), DA(L3), DA(N), W, DW, var, varh(LAG), varh(LEAD), -varh(LAG), -varh(LEAD), Harmonic 5th conversion content(A,V), Harmonic nth content(A,V)
Sub-monitor (Right)	V(L1N), V(L3N), V(L1L3), A(L1), A(L3), A(N), DA(L1), DA(L3), DA(N), W, DW, cos φ, Hz, Wh, -Wh, Fundamental-wave effective value(A,V), Harmonic 5th conversion effective value(A,V), Harmonic nth effective value(A,V)
Bar graph	V(L1N), V(L3N), V(L1L3), A(L1), A(L3), A(N), DA(L1), DA(L3), DA(N), W, DW, var, cos φ, Hz, Io/Igr, Distortion factor(A,V), Harmonic 5th conversion content(A,V), Harmonic nth content(A,V), Fundamental-wave effective value(A,V), Harmonic 5th conversion effective value(A,V), Harmonic nth effective value(A,V)

● Phase (line) change (40)
(Single-phase 3-wire)

→ V(L1N) → V(L3N) → V(L1L3) ┐

→ A(L1) → A(L3) → A(N) ┐

Note(41) Press DISPLAY, Voltage and current are replaced at the same time.

● Measurement factor change (3-phase 3-wire, Measurement display mode)

→ V(L1N) → V(L3N) → V(L1L3) → A(L1) → A(L3) → A(N) → DA(L1) ┐

→ DA(L3) → DA(N) → W → DW → var → cos φ → Hz ┐

→ Io/Igr → Wh → -Wh → varh(LAG) → varh(LEAD) ┐

→ -varh(LAG) → -varh(LEAD) → Nothing ┐

● Measurement factor change (Single-phase 3-wire, Harmonic measurement display mode)

Main monitor : Distortion factor (Fixation)
Sub-monitor (Left) : Harmonic order n → 5th conversion → 1 → 3 → 4 → 5 → 7 → 9 → 11 → 13 → 15 ┐

Sub-monitor (Center) : Harmonic nth content (Fixation)
Sub-monitor (Right) : Harmonic nth effective value (Fixation)

● Single-phase 2-wire (Voltage, current input) (41)(42)

No.	Pattern No.	Main monitor	Sub-monitor (Left)	Sub-monitor (Center)	Sub-monitor (Right)	Bar graph
1	Pattern 1	A	V	W	Wh	A
2	Pattern 2	A	V	W	cos ϕ	A
3	Pattern 3	A	V	W	Hz	A
4	Pattern 4	DA	A	V	W	DA
5	Pattern 5	DA	A	V	Wh	DA
6	Pattern 6	DA	V	W	cos ϕ	DA
7	Pattern 7	W	V	A	Wh	W
8	Pattern 8	W	V	A	cos ϕ	W
9	Pattern 9	W	V	A	Hz	W
10	Pattern 10	DW	V	W	Wh	DW
11	Pattern 11	DW	V	A	cos ϕ	DW
12	Pattern 12	A	cos ϕ	W	Wh	A
13	Pattern 13	A	var	W	Wh	A
14	Pattern 14	W	cos ϕ	var	Wh	W
15	Pattern 15	A	—	—	Wh	A
16	Pattern 16	V	—	—	Hz	V
17	Pattern 17	A	Io/Igr (43)	V	W	A
18	Pattern 18	A	Io/Igr (43)	V	Wh	A

Note(41) Voltage input is pattern 16 only.
Note(42) Current input is pattern 15 only. (However, sub-monitor (right) is displayed blank.)
Note(43) Io/Igr is only with leakage measurement.

● Displays set factor (Single-phase 2-wire)

Main monitor	V, A, DA, W, DW, var, cos ϕ, Hz, Io/Igr, Wh, -Wh, varh(LAG), varh(LEAD), -varh(LAG), -varh(LEAD), Distortion factor(A,V)
Sub-monitor (Left)	V, A, W, var, cos ϕ, Io/Igr
Sub-monitor (Center)	V, A, DA, W, DW, var, varh(LAG), varh(LEAD), -varh(LAG), -varh(LEAD), Harmonic 5th conversion content(A,V), Harmonic nth content(A,V)
Sub-monitor (Right)	V, A, DA, W, DW, cos ϕ, Hz, Wh, -Wh, Fundamental-wave effective value(A,V), Harmonic 5th conversion effective value(A,V), Harmonic nth effective value(A,V)
Bar graph	V, A, DA, W, DW, var, cos ϕ, Hz, Io/Igr, Distortion factor(A,V), Harmonic 5th conversion content(A,V), Harmonic nth content(A,V), Fundamental-wave effective value(A,V), Harmonic 5th conversion effective value(A,V), Harmonic nth effective value(A,V)

● Measurement factor change (Single-phase 2-wire, Measurement display mode)

→ V → A → DA → W → DW → var → cos ϕ → Hz → Io/Igr → Wh → -Wh →
→ varh(LAG) → varh(LEAD) → -varh(LAG) → -varh(LEAD) → Nothing →

● Measurement factor change (Single-phase 2-wire, Harmonic measurement display mode)

Main monitor : Distortion factor (Fixation)
Sub-monitor (Left) : Harmonic order n → 5th conversion → 1 → 3 → 4 → 5 → 7 → 9 → 11 → 13 → 15 →
Sub-monitor (Center) : Harmonic nth content (Fixation)
Sub-monitor (Right) : Harmonic nth effective value (Fixation)

Display combination setting

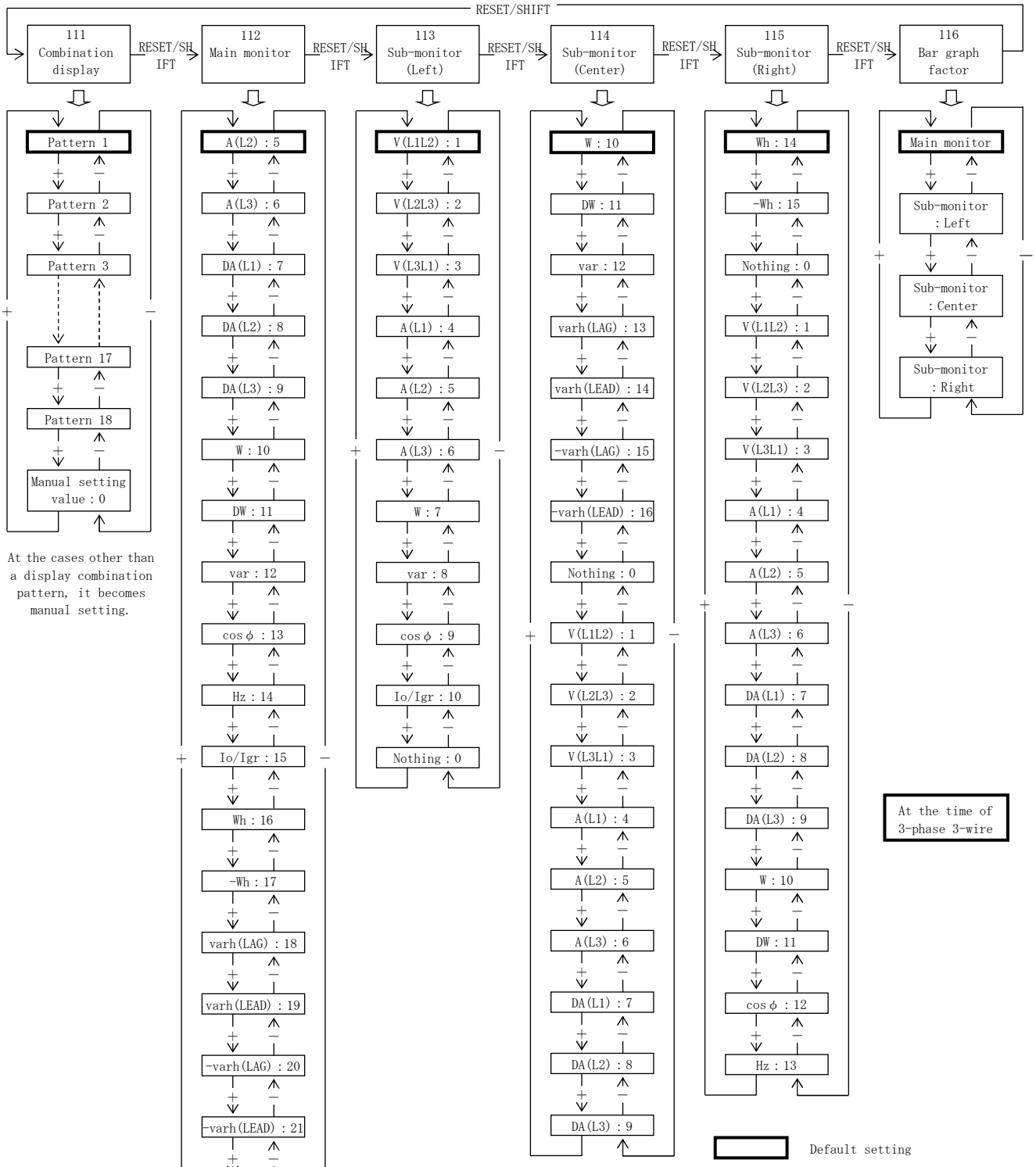

◆ 111 Combination display

Select the factors to be measured and monitored by 4 digital displays out of combination patterns.

Set values are updated by SET.

◆ 112 to 115 Main monitor, Sub-monitor (left), Sub-monitor (center), Sub-monitor (right)

Set these items for a display configuration other than combined patterns. Set values are updated by SET.

◆ 116 Bar graph factor

A factor being monitored in the main monitor is basically displayed by a bar graph.

Set this item for displaying a factor being monitored on a sub-monitor by bar graph.

An underbar is attached to the digital display of the setting sub-monitor.

Set values are updated by SET.

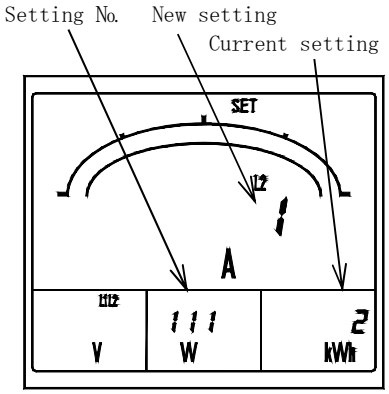

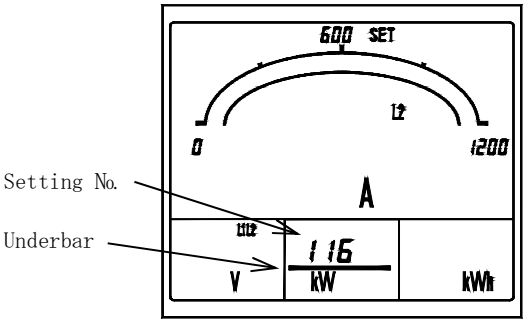

(2) 121AL to 128AL Alarm output setting 【With an alarm output option】

Various setting and an output test are performed about an alarm output.

In case contact outputs 1 and 2 are alarm-output specifications, the corresponding alarm output is setting.

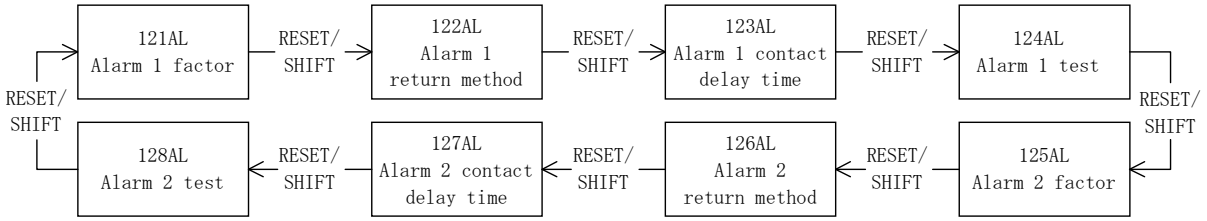

◆ 121AL Alarm 1 factor setting, 125AL Alarm 2 factor setting.

Set the output factor of alarms 1 and 2. Selection by [+] and [−], set value is updated by [SET].

Default value : 1(DA : Demand current)

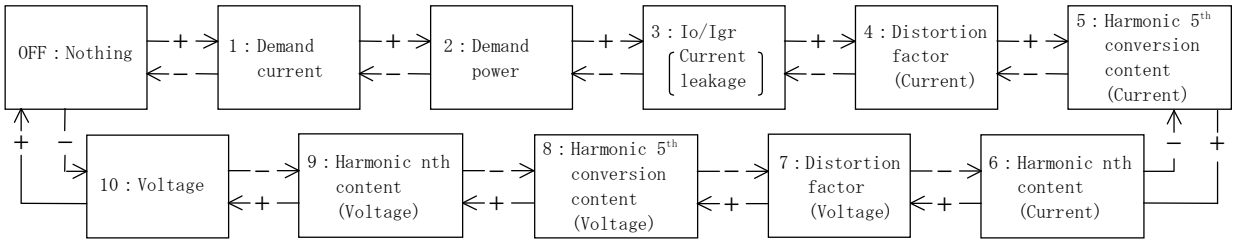

◆ 122AL Alarm 1 reset method setting,
126AL Alarm 2 reset method setting

Output action at the case of a reset of alarms 1 and 2 can be selected from AUTO (automatic reset) and HOLD (manual reset).
In "AUTO (automatic reset)", an alarm output also constitutes OFF according to a reset of an alarm. In "HOLD (manual reset)", even after an alarm reset, an output holds ON. The reset in this case (output OFF) is performed in [RESET/SHIFT].

Selection by [+] and [−], set value is updated by [SET].

Default setting : AUTO (automatic reset)

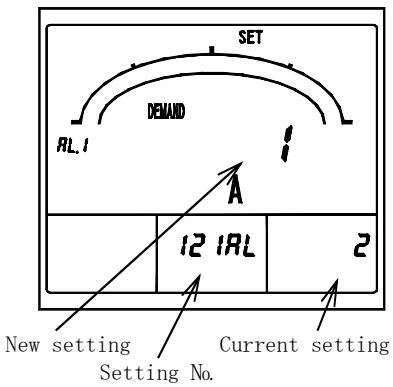

◆ 123AL Alarm 1 contact delay time, 127AL Alarm 2 contact delay time

Set the contact delay time of alarms 1 and 2. The setting range is 0 to 300 seconds (1-second step).

Selection by [+] and [−], set value is updated by [SET].

Default setting : 0 second (With no contact delay)

◆ 124AL Alarm 1 test, 128AL Alarm 2 test

The output of alarms 1 and 2 is tested. While pushing [SET], an output is ON, and if it detaches, an output switches OFF. In addition, while pushing [SET], the test input exceeding rated sensitivity current value is applied to the zero-phase current input circuit inside a product, and if the time which is pushing [SET] exceeds the operating time (time-delay type, 0.1 second < 2 second) of a current leakage, an alarm will occur.
(In case an alarm-output factor is a current leakage (Io/Igr))
And, test input will become OFF if [SET] is detached. Please apply rated voltage to a voltage-input terminal (between P1-P2) at this time.
In addition, about a reset of an alarm, it becomes action united with reset method setting (automatic reset / manual reset) of each alarm output.

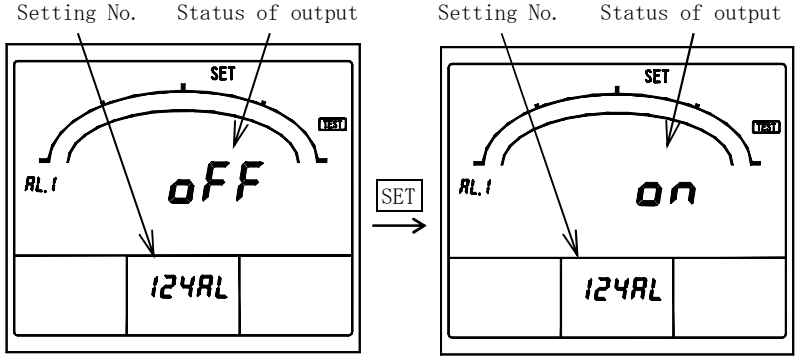

Alarm 1 test

(3) 131H to 136 Demand detection setting 【Except voltage input】

The following operation method is setting.

Demand current, action of demand, high-alarm value, time-interval, power-factor, demand active power.

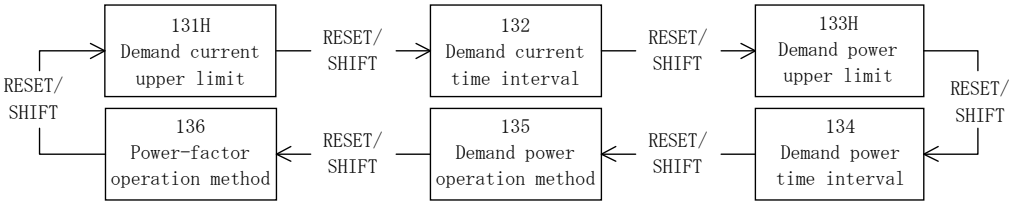

◆ 131H Demand current upper limit. 133H Demand active power upper limit.

Set the high-alarm value of demand current(DA) and demand active power(DW).

The setting range is 5 to 100% (1% step). Selection by [+] and [−], set value is updated by [SET].

Default setting : 80% (Demand current),

OFF [Non use] (Demand active power)

◆ 132 Demand current time interval. 134 Demand active power time interval.

Set the time interval (95% time interval) of demand current(DA) and demand active power(DW). Selection by [+] and [−], set value is updated by [SET].

Default setting : 0 second (demand current, demand active power)

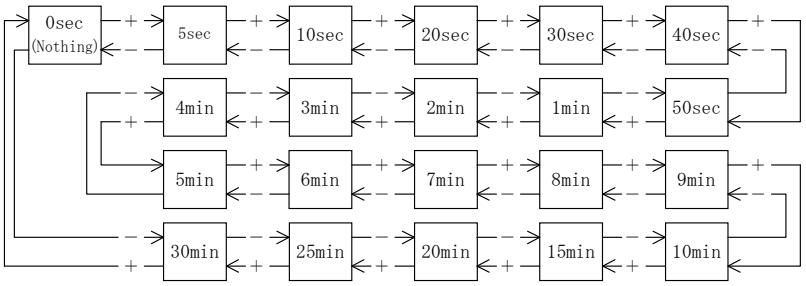

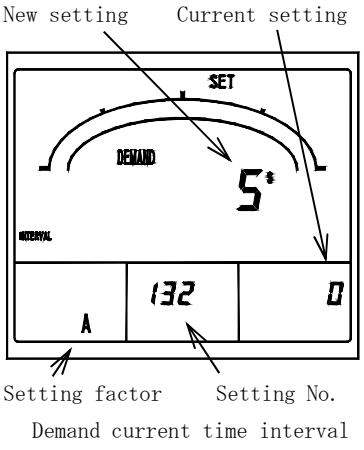

Demand current time interval

◆ 135 Demand active power operation method

The operating system of demand (DW) can be selected from d (operating system according with bimetallic type : demand) and A (Averaging arithmetic in demand time delay : average).

Selection by [+] and [−], set value is updated by [SET].

Default setting : d (Operating system according with bimetallic type)

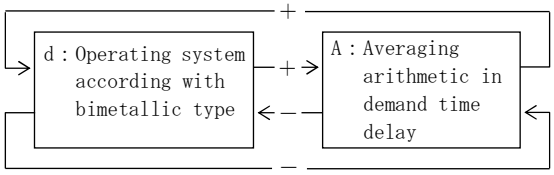

● Demand time delay characteristic (Demand current, Demand active power)

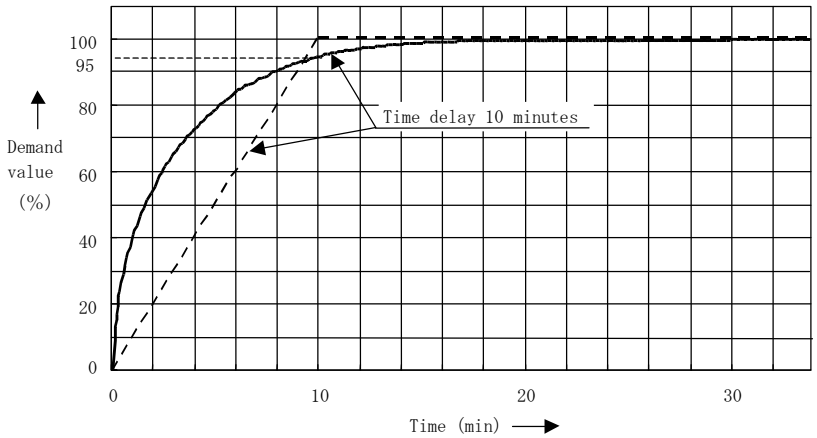

Arithmetic method according with bimetallic type. (Indication time to 95% of a final constant value)

Averaging arithmetic in demand time delay. (Averaging time in demand time delay.)

Arithmetic method

Demand current measurement : Arithmetic method according with bimetallic type.

Demand active power measurement : Arithmetic method according with bimetallic type (Default value). Or the averaging arithmetic in a demand time interval. One is selected by setting.

100% indication time is about 3 times the time delay at the case of the arithmetic method according with bimetallic type.(In case of 10 minutes/95% of time-interval, time to reach to 100% is about 30 minutes.)

Demand measurement is measured to the 2 times of the rated current, and the 2 time of a rated active power.

◆ 136 Power-factor operation method

The operation method of power-factor measurement can be selected from 0 (instant measurement) and 1 (averaging operator in a demand time interval).

In case it is set as "1 (averaging operator in a demand time interval)", power-factor measurement is calculated from the operation method of a power demand time interval and a demand active power meter.

Selection by [+] and [−], set value is updated by [SET].

Default setting : 0 (Instant measurement)

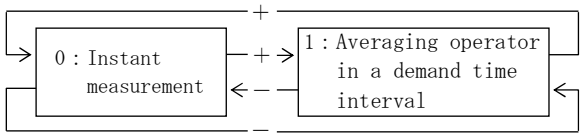

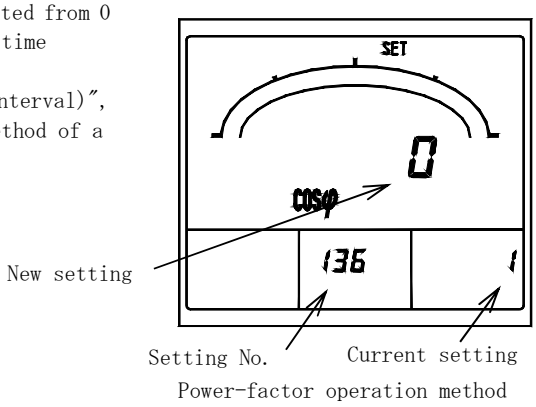

Power-factor operation method

(4) 141H to 14A Harmonic detection setting 【All models】

Set the high-alarm value of each harmonic (current, voltage) measurement factor, factor, 5th conversion detection characteristics, and average time interval is performed.

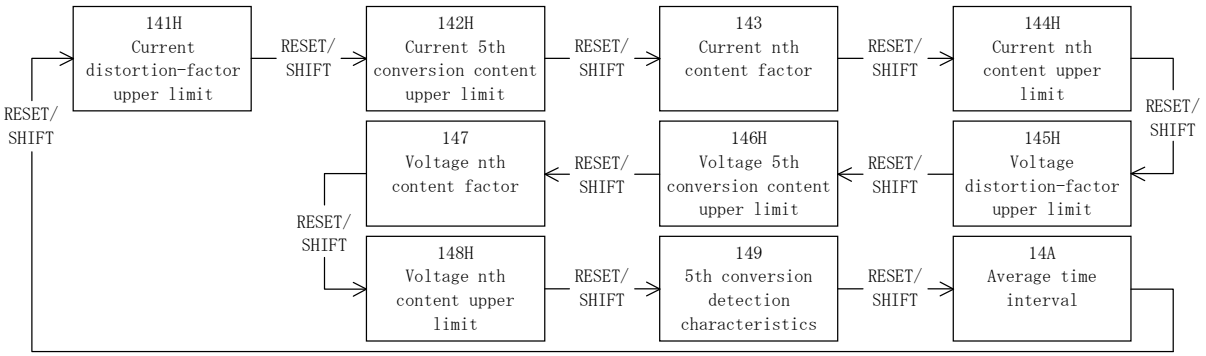

◆ 141H Current distortion-factor upper limit,
145H Voltage distortion-factor upper limit

Set the high-alarm value of distortion factor (current, voltage).

Setting range. Current : 5 to 100% (1% step)
Voltage : 1.0 to 20.0% (0.1% step)

Selection by [+] and [−], set value is updated by [SET].

Default setting : OFF [Non-use] (Current, Voltage)

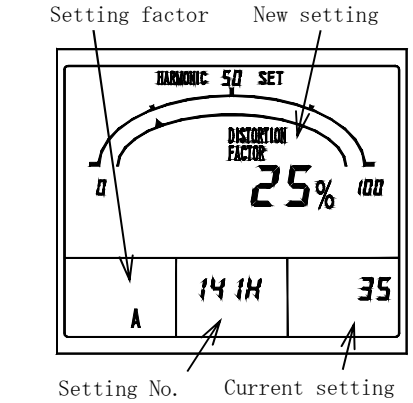

Current distortion-factor upper limit

◆ 142H Current 5th conversion content upper limit,
146H Voltage 5th conversion content upper limit.

Set the high-alarm value of 5th conversion content (current, voltage).

Setting range. Current : 5 to 100% (1% step)
Voltage : 1.0 to 20.0% (0.1% step)

Selection by [+] and [−], set value is updated by [SET].

Default setting : OFF [Non-use] (Current, Voltage)

◆ 143 Current nth content factor, 147 Voltage nth content factor.

Set the factor (order) of nth content (current, voltage).

An order can be selected from n= 3, 4, 5, 7, 9, 11, 13, 15.

Selection by [+] and [−], set value is updated by [SET].

Default setting : 5th(Current, Voltage)

◆ 144H Current nth content upper limit,
148H Voltage nth content upper limit.

Set the high-alarm value of nth content (current, voltage).

Setting range. Current : 5 to 100% (1% step)
Voltage : 1.0 to 20.0% (0.1% step)

Selection by [+] and [−], set value is updated by [SET].

Default setting : OFF [Non-use] (Current, Voltage)

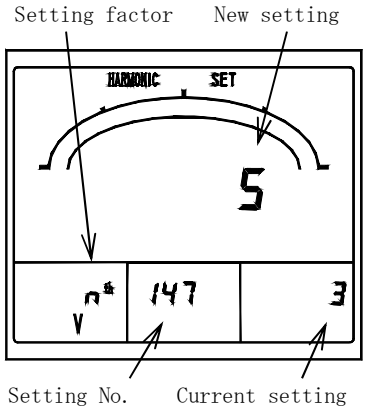

Voltage nth content factor

◆ 149 5th conversion detection characteristics.

The detection characteristics of 5th conversion content can be selected from A (average mode) and I (inverse-time-delay mode).
In case of "A (average mode)", when average measured value (the average of instantaneous value in average time interval) exceeded the upper limit alarm value, it detects.
And in case of "I (inverse-time-delay mode)", when exceeding the upper limit warning value by anti-time limit characteristic of instantaneous value, it detects.
Selection by [+] and [−], set value is updated by [SET].
Default setting : I(inverse-time-delay mode)

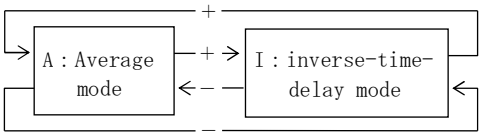

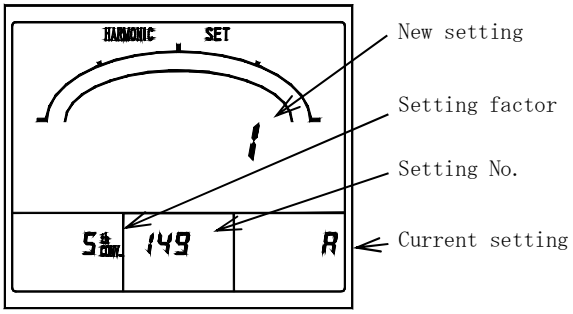

5th conversion detection

Alarm output, Inverse-time-delay characteristics
In case of high-limit-setting value 35%
(voltmeter 3.5%)

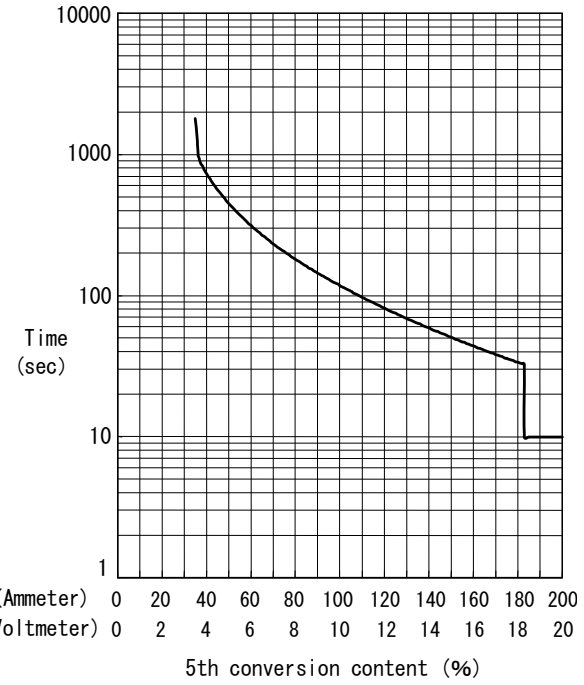

◆ 14A Average time interval

Set the average time interval of each harmonic measurement.
Selection by [+] and [−], set value is updated by [SET].
In addition, in case the detection characteristics of 5th conversion content are set as inverse-time-delay mode, in order that 5th conversion content may operate in inverse-time-delay characteristics, this time interval is disregarded. Default setting : 0 minute (With no average)

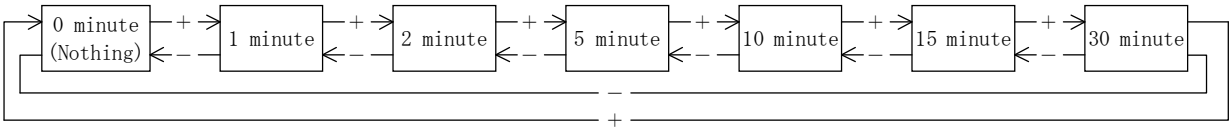

(5) 151H to 152L Instant measurement detection setting 【Current input is excluded.】
An upper limit low-alarm value is set by instant measurement (voltage factor).

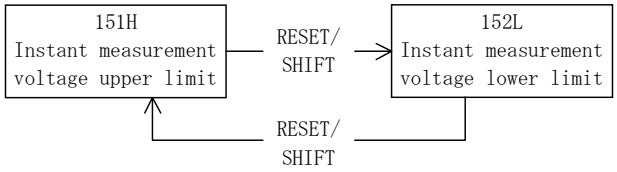

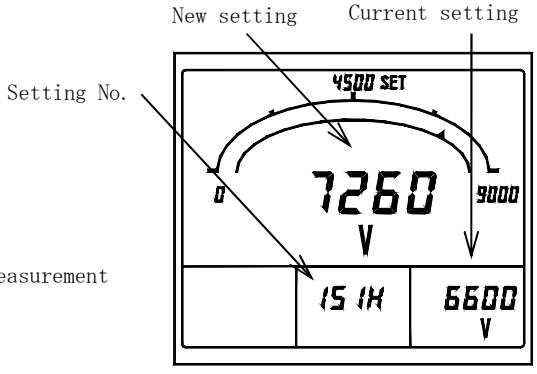

Instant measurement voltage upper limit

◆ 151H Instant measurement voltage upper limit,
152L Instant measurement voltage lower limit.

Set the high-alarm value and low-alarm value of instant measurement (voltage).
Setting range is 30 to 150%(1% step).
Selection by [+] and [−], set value is updated by [SET].
Default setting : OFF [Non-use] (Upper limit, lower limit)

(6) 161 to 164 Leakage detection setting 【With leakage measurement】

The rated sensitivity current value of leakage measurement, a detection factor, the circuit configuration at the case of 3-phase 3-wire, and setting of ZCT to be used are performed.

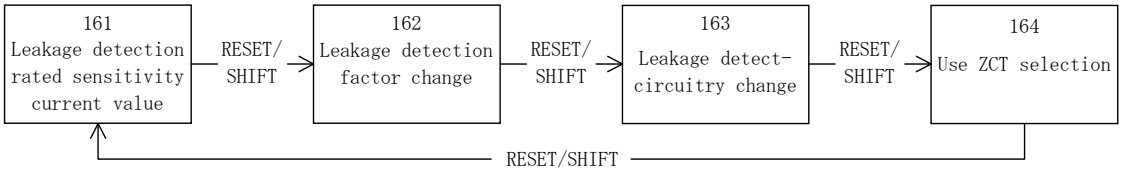

◆ 161 Leakage detection rated sensitivity current value

Set the rated sensitivity current value of current leakage.
Setting value can be selected from 0.03A, 0.05A, 0.1A, 0.2A, 0.4A, 0.8A.
Selection by [+] and [−], set value is updated by [SET].
Default setting : 0.1A

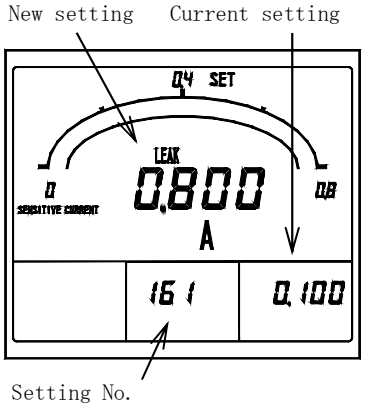

◆ 162 Leakage detection factor change

Measurement of current leakage and detection factor can be selected from Io and Igr.
Selection by [+] and [−], set value is updated by [SET].
However, a current input product constitutes Io fixation and cannot carry out Igr detection.
Default setting : Io

<Caution> Please apply a voltage input, in case you measure and detect Igr. In case the voltage input is not applied, measurement or detection of Igr cannot be performed correctly.

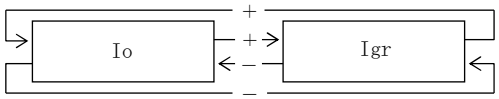

◆ 163 Leakage detect-circuitry change

The circuit configuration of the current-leakage detection in 3-phase 3-wire can be selected from 1-phase earthing, 1-phase earthing (negative phase sequence), and non-earthing.
Selection by [+] and [−], set value is updated by [SET]. Default setting : A (1 phase earthing)

<Caution> If actual connection is different from this setting, a current leakage Igr cannot measure or detect correctly. Setting of "1-phase earthing (negative phase sequence)" is setting for making Igr measure and detect correctly, in case a circuit is a negative phase sequence. In the case of the right usual phase sequence, it is not necessary to make it this setting.

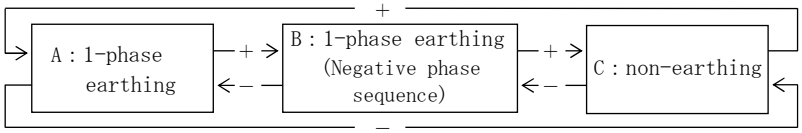

◆ 164 Use ZCT selection

ZCT used by current-leakage measurement can be selected.
Selection by [+] and [−], set value is updated by [SET].
Default setting : 0(TYPE 0)

<Caution> If ZCT which you actually use is different from this setting, the error of current leakages Io and Igr will become large. In case you use ZCT(s) other than our company recommendation goods, please consult in advance.

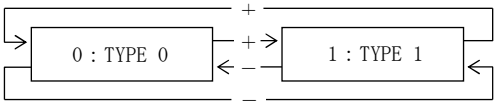

TYPE 0 : Our company recommendation product (Standard).
TYPE 1 : Except our company recommendation product.

(7) 171 to 172 Backlight setting 【All models】
(However, the brightness of backlight is only white backlight products)

It sets action and brightness of backlight.

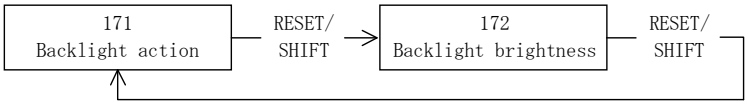

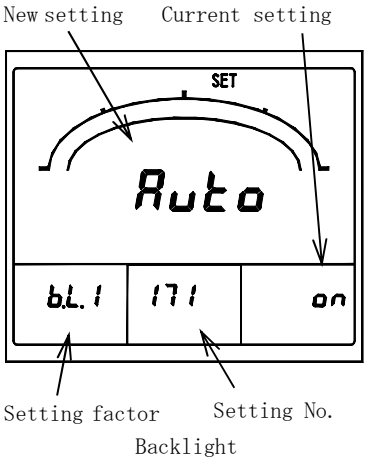

◆ 171 Backlight action

It can select from ON (always-on), AUTO (auto off), and OFF (always-off) about action of backlight.

If 5 minutes elapses without operating a switch in case it is set as "AUTO (auto off)", backlight will go out automatically.

After that, backlight will be turned on if either of switches is operated.

Selection by [+] and [−], set value is updated by [SET].

Default setting : AUTO (Auto off)

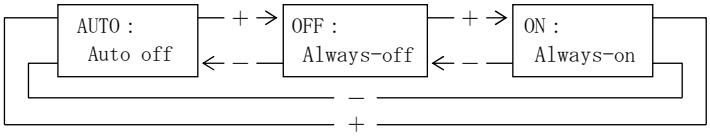

◆ 172 Backlight brightness

It can select the brightness of backlight as five steps of 1 to 5.

Backlight becomes the darkest if it is set as "1".

Backlight becomes the brightest if it is set as "5".

Selection by [+] and [−], set value is updated by [SET].

Default setting : 3 (Middle)

Setting	Brightness
5	Bright
4	↕
3	
2	
1	Dark

5.3.2 Setting mode 2

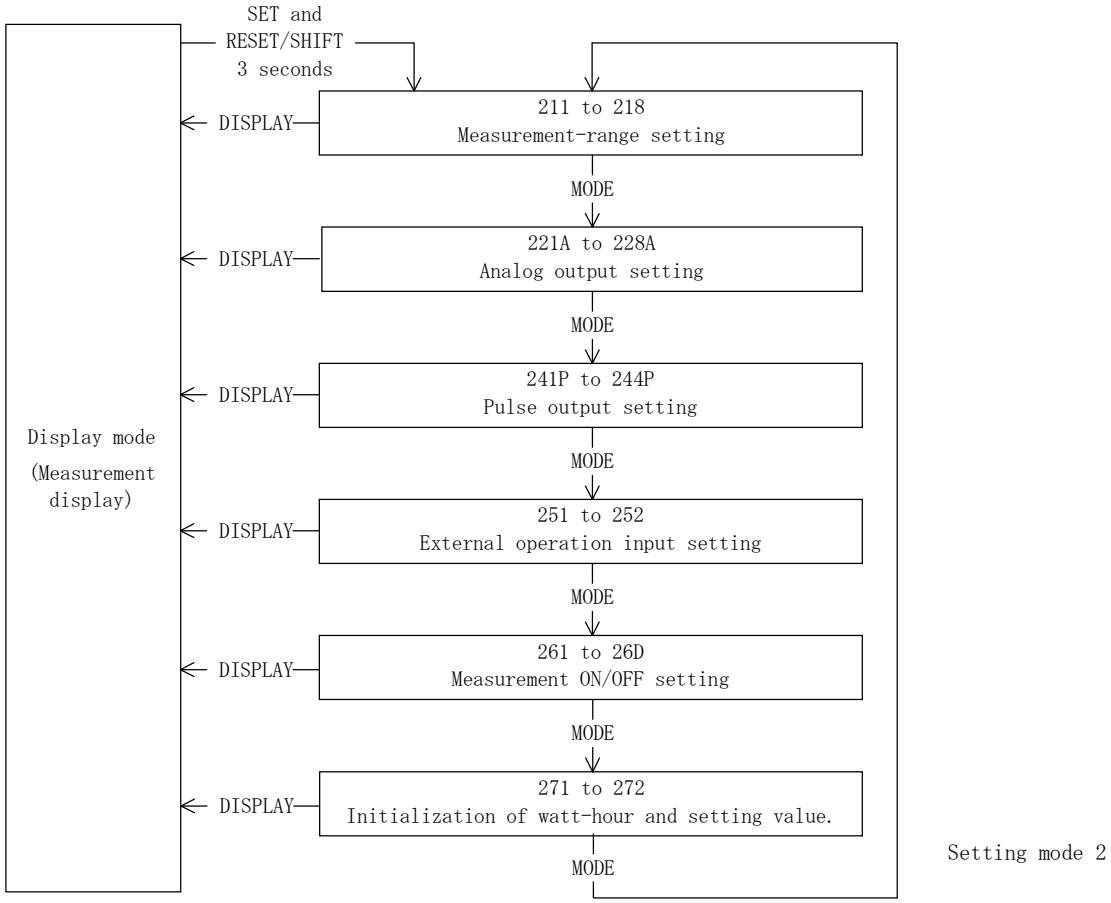

Setting mode 2 is selected by pressing SET and RESET/SHIFT switches continuously for longer than 3 seconds.
Pushing MODE switch performs movement of setting item.
The present mode can be returned to the display mode by pressing DISPLAY switch.

< Caution >
If setting change should have been mistaken, a display and output of measurement are not obtained correctly.
Therefore, users must not set. The setting item without the corresponding option is not displayed.

(1) 211 to 218 Measurement-range setting 【All models】
Setting of measurement range in each measurement factors.

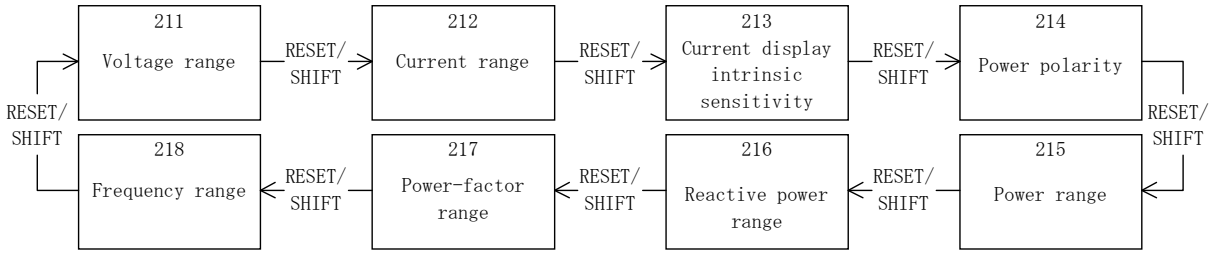

◆ 211 Voltage range

Set the voltage range (VT ratio). Change of this setting also sets the measurement range of active power and reactive power automatically simultaneously.

Selection by [+] and [−], set value is updated by [SET].

Default setting : 6600V(3φ3W)、110.0V(1φ3W)、3300V(1φ2W)

Voltage measurement range (34 range)

150.0V(110V)	4500V (3300V)	150.0kV (110kV)
150V (110V)	4.50kV (3300V)	180.0kV (132kV)
300.0V(220V)	9000V (6600V)	210.0kV (154kV)
300V (220V)	9.00kV (6600V)	270.0kV (187kV)
500V (380V)	15.00kV (11kV)	300.0kV (220kV)
600V (440V)	18.00kV (13.2kV)	400.0kV (275kV)
600V (460V)	18.00kV (13.8kV)	500.0kV (380kV)
600V (480V)	24.00kV (16.5kV)	750.0kV (550kV)
1200V (880V)	25.00kV (18.4kV)	
1500V (1100V)	30.0 kV (22kV)	
2400V (1650V)	45.0 kV (33kV)	
3000V (2200V)	90.0 kV (66kV)	
3.00kV (2200V)	120.0 kV (77kV)	

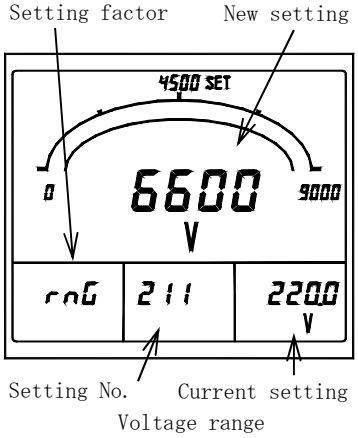

Voltage range

◆ 212 Current range

Set the current range (CT ratio). Change of this setting also sets the measurement range of active power and reactive power automatically simultaneously.

Selection by [+] and [−], set value is updated by [SET].

Default setting : 100.0A(3φ3W)、500A(1φ3W)、50.0A(1φ2W)

Current-measurement range (76 range)

5.00A	20.00A	80.0A	250A	1.00kA	2.00kA	6.00kA	15.00kA
6.00A	20.0A	100.0A	300.0A	1200A	2500A	7500A	15.0kA
7.50A	25.00A	100A	300A	1.20kA	2.50kA	7.50kA	20.00kA
8.00A	25.0A	120.0A	400A	1500A	3000A	8000A	20.0kA
10.00A	30.00A	120A	500A	1.50kA	3.00kA	8.00kA	30.00kA
10.0A	30.0A	150.0A	600A	1600A	4000A	9.00kA	30.0kA
12.00A	40.0A	150A	750A	1.60kA	4.00kA	10.00kA	
12.0A	50.0A	200.0A	800A	1800A	5000A	10.0kA	
15.00A	60.0A	200A	900A	1.80kA	5.00kA	12.00kA	
15.0A	75.0A	250.0A	1000A	2000A	6000A	12.0kA	

◆ 213 Current display intrinsic sensitivity

Set the full scale of current meter.

The setting range is 40 to 120% of CT ratio. And, it can select from the following values.

Selection by [+] and [−], set value is updated by [SET].

Default setting : 100.0A(3φ3W), 500A(1φ3W), 50.0A(1φ2W)

The measurement range (current, active power, reactive power) which can be set. ($\times 10^n$)	
1.□	1.0／1.2／1.4／1.5／1.6／1.8
2.□	2.0／2.4／2.5／2.8
3.□	3.0／3.2／3.6
4.□	4.0／4.2／4.5／4.8
5.□	5.0／5.6
6.□	6.0／6.4
7.□	7.2／7.5
8.□	8.0／8.4
9.□	9.0／9.6

Example)
In case of CT ratio＝100.0A.
・40% of 100A is 40A.
・120% of 100A is 120A.
A measurement range can be selected within the limits of 40 to 120A.
Therefore, a left table A measurement range can be selected from 40/42/45/48/50/56/60/64/72/75/80/84/90/96/100/120A.

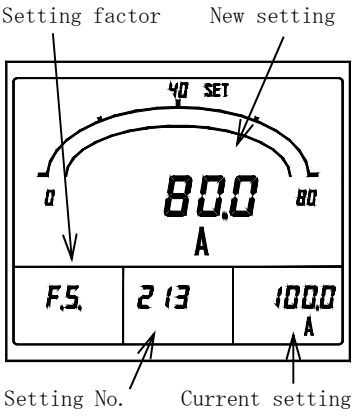

Current display intrinsic sensitivity

◆ 214 Active power polarity

A swing display of active power meter can be selected from P (one side swing) and － (both swings).
Selection by ＋ and －, set value is updated by SET.
Default setting : P (One-side swing)

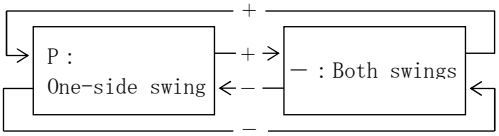

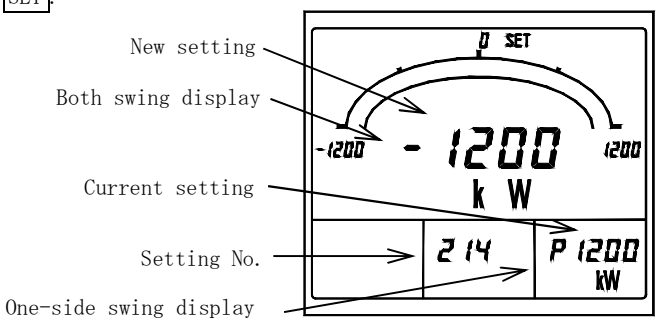

Power polarity

◆ 215 Active power range

Set the full scale of active power meter. The setting range is 40 to 115% of range of a VT ratio × CT ratio.
And it can select from "213 current display intrinsic sensitivity" tables.
Selection by ＋ and －, set value is updated by SET.

<Caution> VT ratio : In case of 220V direct input. Calculates by VT ratio＝2.
CT ratio : In case of 1A input. Calculates by CT ratio÷5.
Default setting : 3φ3W : 1200kW , 1φ3W : 100.0kW , 1φ2W : 150.0kW

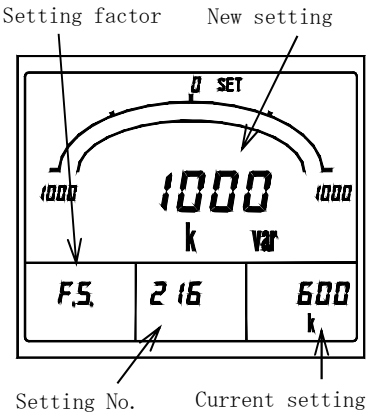

Reactive power range

◆ 216 Reactive power range

Set the full scale of reactive power meter.
The setting range is 30 to 115% of range of a VT ratio × CT ratio.
And it can select from "213 current display intrinsic sensitivity" tables.
Selection by ＋ and －, set value is updated by SET.

<Caution> VT ratio : In case of 220V direct input. Calculates by VT ratio＝2.
CT ratio : In case of 1A input. Calculates by CT ratio÷5.
Default setting : 3φ3W : 600kvar , 1φ3W : 50.0kvar , 1φ2W : 75.0kvar

◆ 217 Power-factor range

A power-factor measurement range can be selected from 0.500 - 1.000 - 0.500/0.000 - 1.000 - 0.000.
Change of this setting also sets the analog output range of a power-factor automatically simultaneously.
Selection by ＋ and －, set value is updated by SET.
Default setting : 0.500 - 1.000 - 0.500

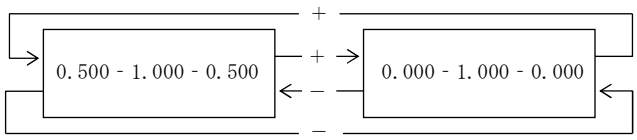

◆ 218 Frequency range

A frequency measurement range can be selected from 45.0 - 55.0Hz/ 55.0 - 65.0Hz/45.0 - 65.0Hz. Change of this setting also sets the analog output range of a frequency automatically simultaneously.
Selection by ＋ and －, set value is updated by SET.
Default setting : 45.0 - 65.0Hz

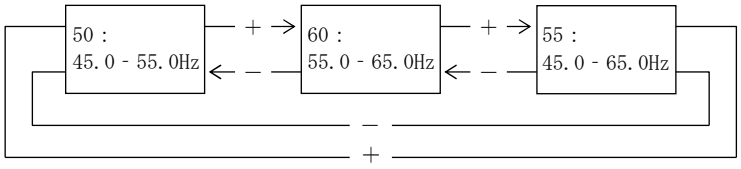

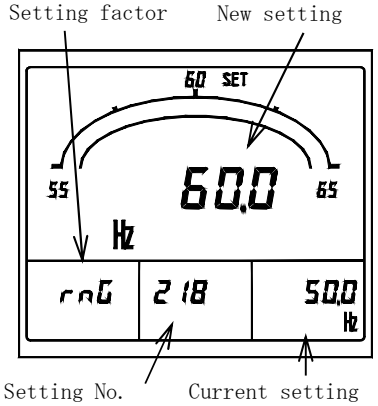

Frequency range

(2) 221A to 228A Analog output setting 【With an analog output option】
Various setting of analog output is performed.

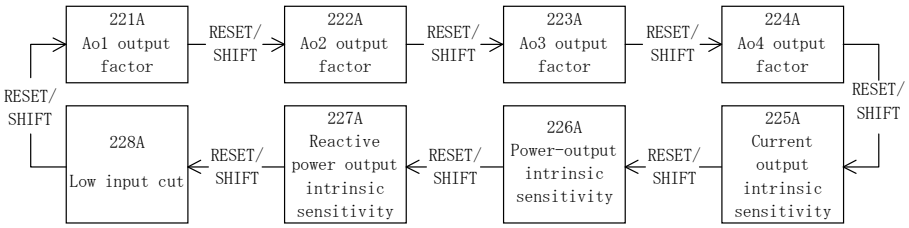

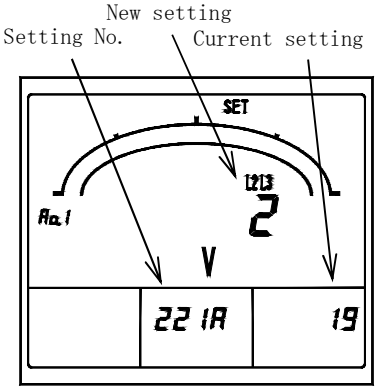

Ao1 output factor

◆ 221A to 224A AO(analog output)1 to 4 output factor.
Set the output factor of each analog outputs.
Selection by [+] and [−], set value is updated by [SET].
Default setting : AO1 A(L2) (3φ3W)、A(L1) (1φ3W)、A (1φ2W)
AO2 V(L1L2) (3φ3W)、V(L1N) (1φ3W)、V (1φ2W)
AO3 W (3φ3W/1φ3W/1φ2W)
AO4 cosφ (3φ3W/1φ3W/1φ2W)

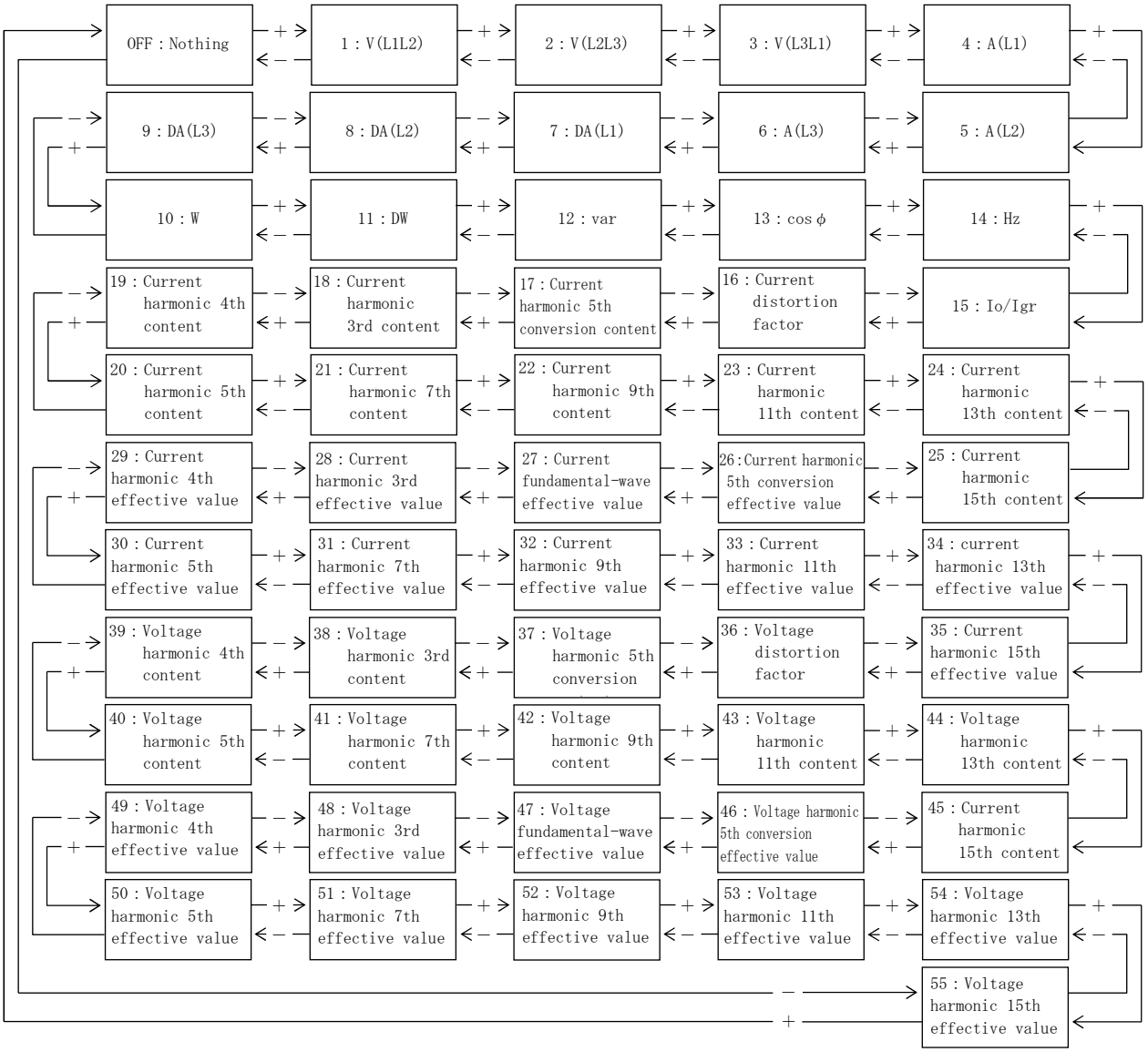

◆ 225A Current output intrinsic sensitivity,
226A Active power output intrinsic sensitivity,
227A Reactive power output intrinsic sensitivity.

Output intrinsic sensitivity (% of an output to an input) is set about each analog output of current, active power, and reactive power.
The setting range can be selected from the following.

Current : 40.0 to 120.0% (0.1% step)
Active power : 40.0 to 115.0% (0.1% step)
Reactive power : 30.0 to 115.0% (0.1% step)

Selection by [+] and [−], set value is updated by [SET].
Default setting : 100.0%(Current, Active power),
50.0%(Reactive power)

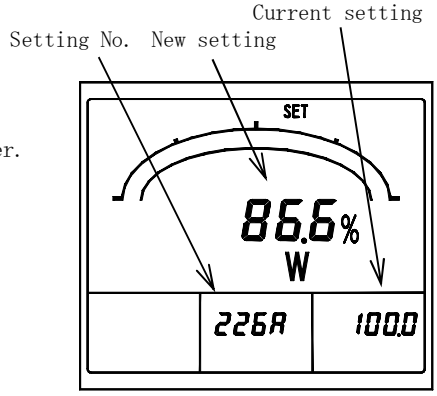

Power-output intrinsic sensitivity,

Example) 3φ3W, 9000V, 100.0A, 1200kW range, Analog output DC4－20mA
・Set 100.0%. Analog output is DC20mA in 1200kW of primary inputs.
・Set 80.0%. Analog output is DC20mA in 1200kW×0.8＝960kW of primary input.

◆ 228A Low input cut
It is the function which makes analog output a lower limit at the case of a minute input (input which corresponds to 0.5% or less).
A function can be selected from ON (Use) and OFF (Non-use).
Selection by [+] and [−], set value is updated by [SET].
Default setting : OFF (Non-use)

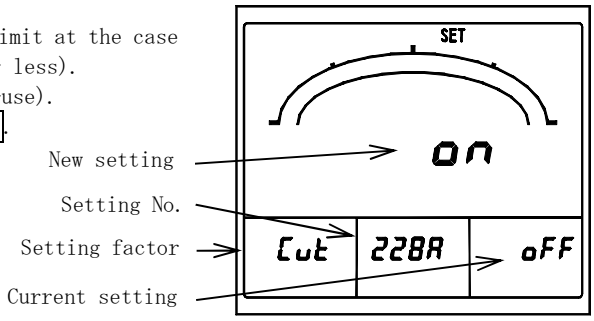

Low input cut

(3) 241P to 244P Pulse output setting 【With a pulse output option】
Various setting of a pulse output is performed.

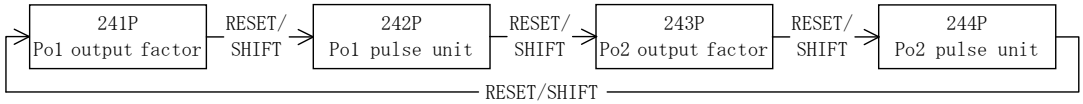

◆ 241P PO(pulse output) 1 output factor,
243P PO(pulse output) 2 output factor

Set the output factor of each pulse output.
Selection by [+] and [−], set value is updated by [SET].
Default setting : Wh (PO1, PO2)

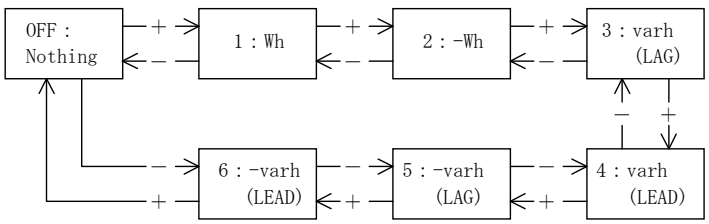

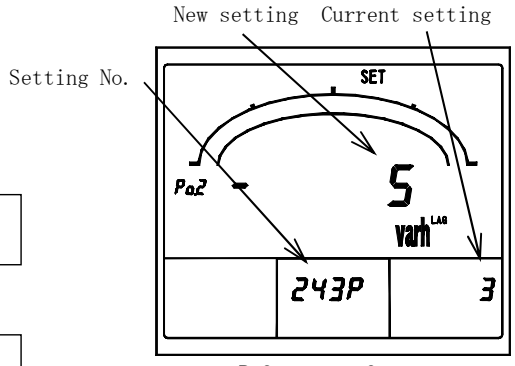

Po2 output factor

◆ 242P PO(pulse output) 1 pulse unit,
244P PO(pulse output) 2 pulse unit

Set the pulse unit of each pulse output.
A pulse unit can be selected from four types.
The pulse unit that can be selected is decided with full-load power.
Default setting : 10kWh/p [3φ3W] (PO1, PO2),
1kWh/p [1φ3W/1φ2W] (PO1, PO2)

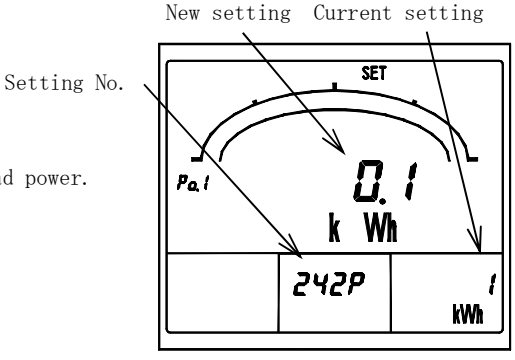

Po1 pulse unit

(4) 251 to 252 External operation input setting 【With an external operation input option】
Various setting of external operation input is performed.

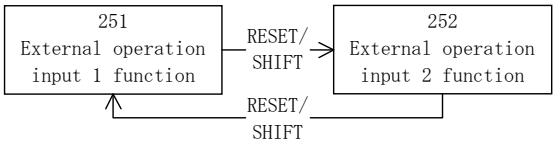

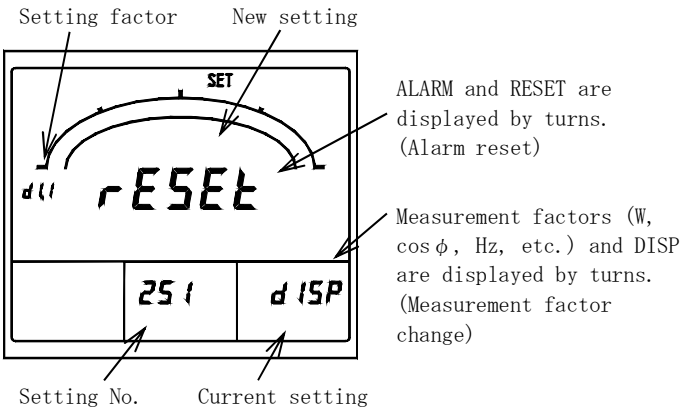

◆ 251 External operation input 1 function,
252 External operation input 2 function

The function of each external operation input (alarm reset, maximum / minimum reset, measurement factor change, phase change) can be selected.
Selection by [+] and [−], set value is updated by [SET].

Default setting (With an alarm-output option)
Alarm reset (External operation input 1)
Maximum / minimum reset (External operation input 2)

Default setting (With no alarm-output option)
Maximum / minimum reset (External operation input 1)
Measurement factor change (External operation input 2)

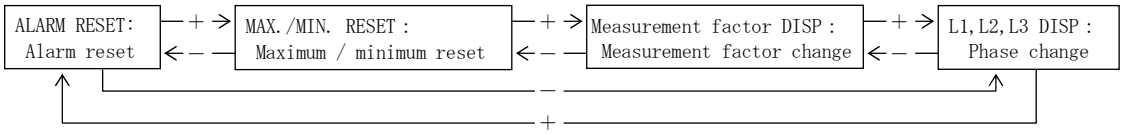

・About the setting display in an external operation input function

Function	The contents of a display at the case of function setting	"Current setting" display point	"New setting" display point
Alarm reset	"ALARM" and "RESET" are displayed by turns by 7 segment displays of the main monitor.	Sub-monitor (right)	Main monitor
Maximum / minimum reset	"RESET" is displayed by 7 segment displays of the main monitor. And, "MAX" and "MIN" display by turns.		
Measurement factor change	"DISP" is displayed by 7 segment displays of the main monitor. And, each measurement factor (units of A, V, W, etc.) displays by turns.		
Phase change	"DISP" is displayed by 7 segment displays of the main monitor. And, each phase (L1, L2, L3, N) displays by turns.		

(5) 261 to 26D Measurement ON/OFF setting 【All models (However, a current leakage is with leakage measurement)】
Measurement display ON/OFF setting of each measurement factor is performed.
Selection by [+] and [−], set value is updated by [SET].
Default setting : ON (All measurement factors)

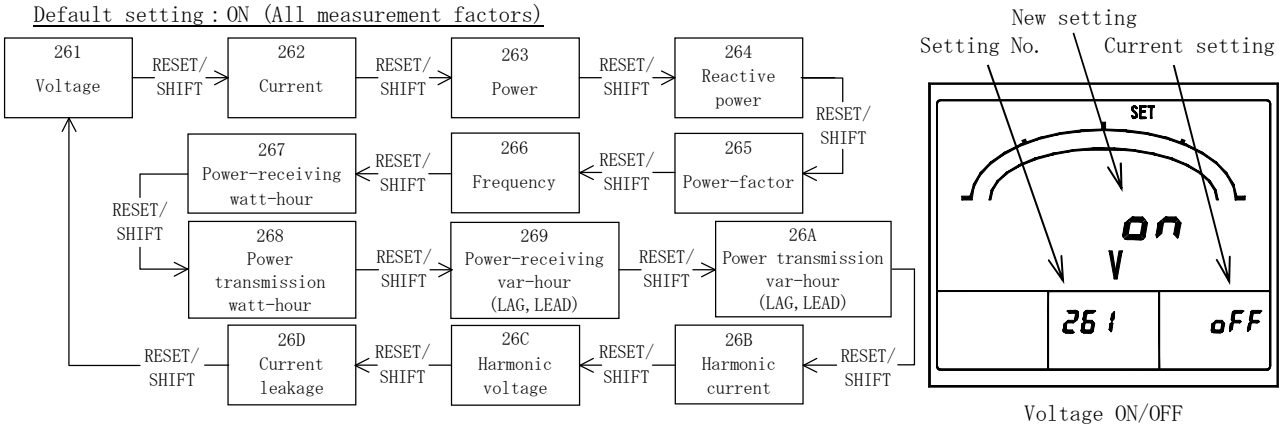

Voltage ON/OFF

(6) 271 to 272 Initialization of watt-hour and setting value. 【All models 】
Package reset of watt-hour is performed. And, each set value is initialized (returns to default setting).

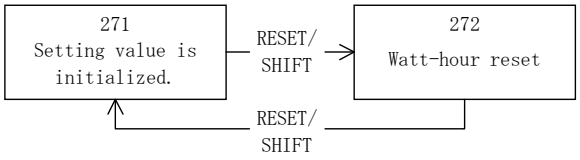

◆ 271 Initialization of setting value
Each set value is initialized (returns to default setting).
Pushing [SET] for 3 seconds initializes all set values.

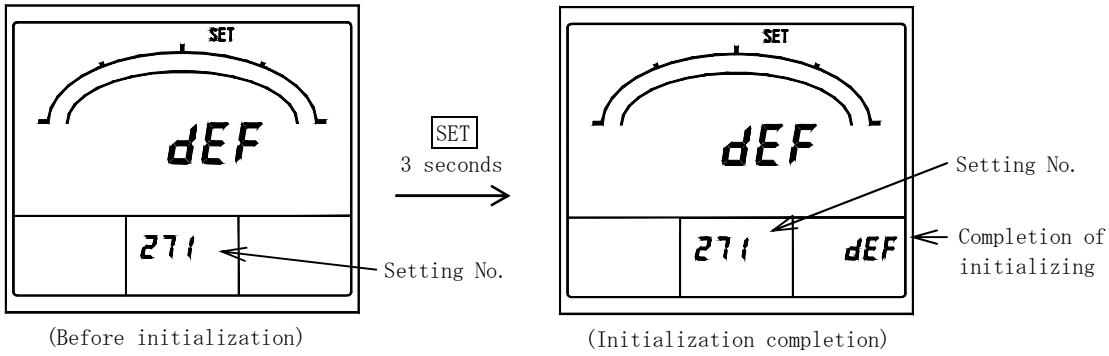

(Before initialization) (Initialization completion)

Initialization of setting value

◆ 272 Watt-hour reset
Integrated value of each electric-energy display is cleared (=0). By pushing [SET] for 3 seconds, all integrated value (Wh, -Wh, var(LAG), -var(LAG), var(LEAD), var(LEAD)) is cleared by package.

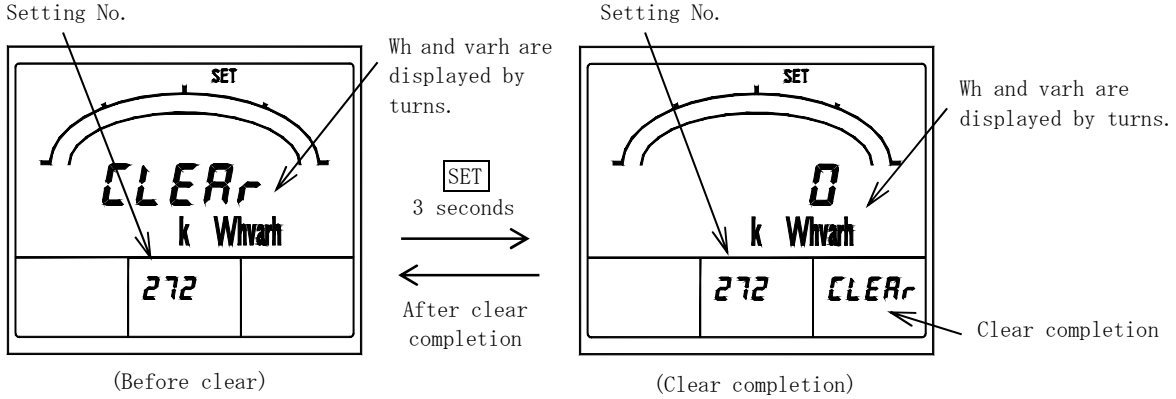

(Before clear) (Clear completion)

Watt-hour reset

5.3.3 Setting mode 3

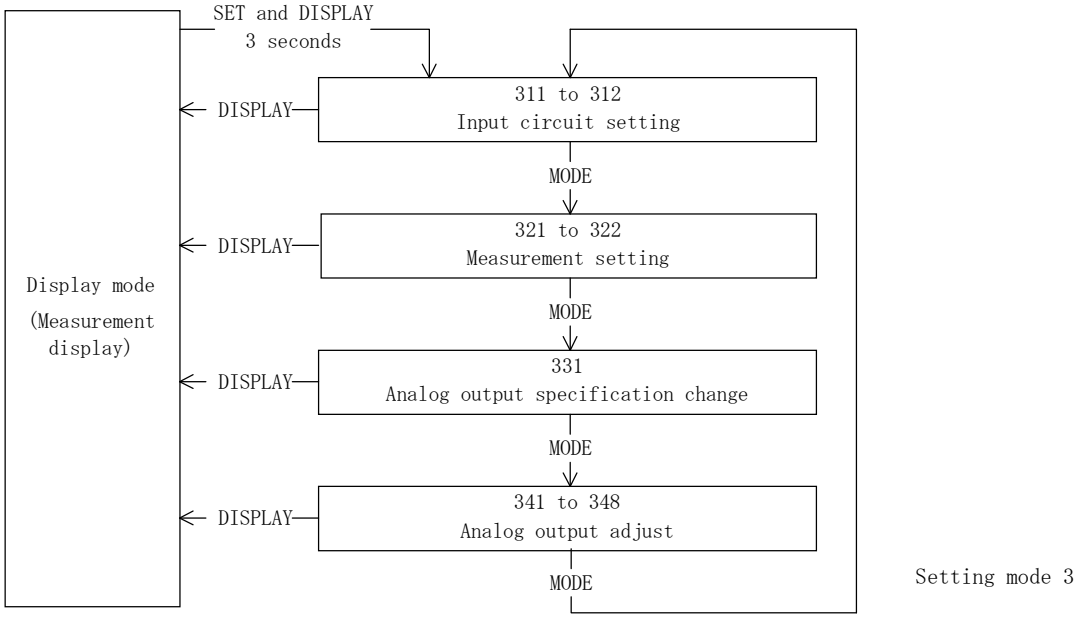

Setting mode 3 is selected by pressing SET and DISPLAY switches continuously for longer than 3 seconds.
Pushing MODE switch performs movement of setting item.
The present mode can be returned to the display mode by pressing DISPLAY switch.

< Caution >
If setting change should have been mistaken, a display and output of measurement are not obtained correctly.
Therefore, users must not set. The setting item without the corresponding option is not displayed.

(1) 311 to 312 Input circuit setting 【All models】

Set the input circuit and phase wire and input voltage / phase-voltage full scale.

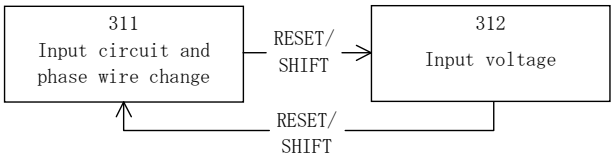

◆ 311 Input circuit and phase wire change

Set the input circuit and phase wire (1φ3W).

Selection by [+] and [−], set value will be updated if [SET] is pushed for 3 seconds.

Default setting : 3φ3W (3φ3W, No designation),
1φ3W [L1-N-L3] (1φ3W), 1φ2W (1φ2W)

<Caution>

・When this setting is changed, it will become the default setting of the input circuit after all set values changing.

・The right measurement cannot be performed if setting of actual connection and phase wire are different.

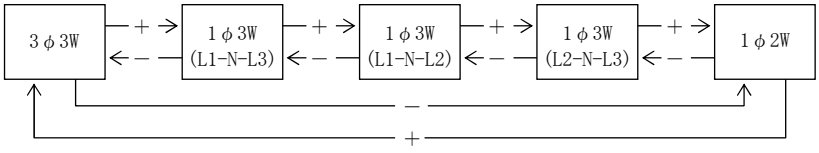

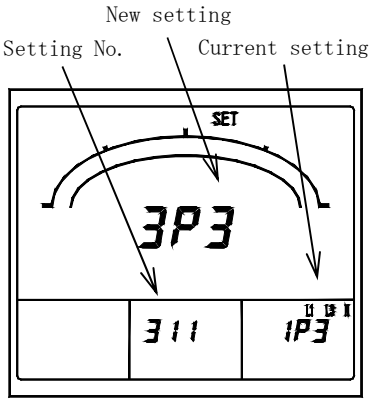

Input circuit and phase wire change

◆ 312 Input voltage

Set the input voltage (3φ3W, 1φ2W) or phase-voltage full scale (1φ3W).

In 3φ3W/1φ2W and 1φ3W, the contents of a setting are different.

Selection by [+] and [−], set value is updated by [SET].

Default setting : 300V (1φ3W)

Default setting : 110V (3φ3W, 1φ2W or no designation)

・3φ3W, 1φ2W

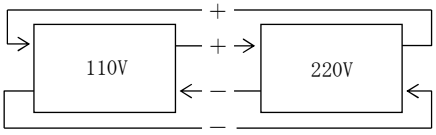

・1φ3W

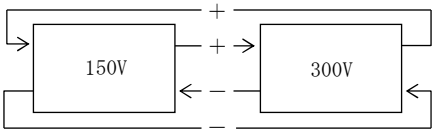

Setting of 300V, Output is AC0 - 150V/DC4 - 12mA.

Setting of 150V, Output is AC0 - 150V/DC4 - 20mA.

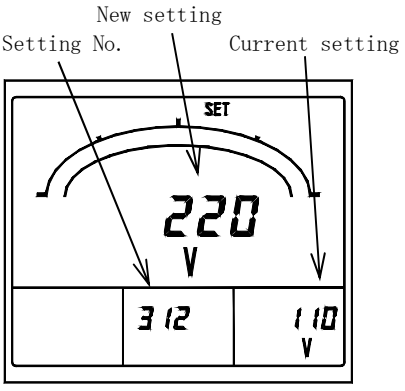

Input-voltage rating (3φ3W)

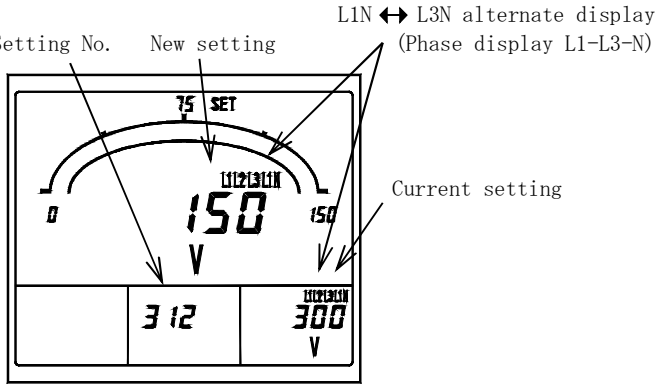

Phase-voltage full scale (1φ3W)

(2) 321 to 322 Measurement setting 【All models】

Set the dead band of measurement display, and with or without of tidal current measurement.

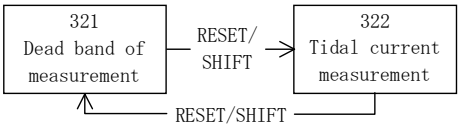

◆ 321 Measurement dead band

Set the dead band of measurement display.
By this setting, variation of less than this set value is disregarded by voltage, current, active power, and reactive power measurement display.
Setting range : 0.0 to 2.0% (0.1% step)
Selection by [+] and [−], set value is updated by [SET].
Default setting : 0.0% (Nothing)

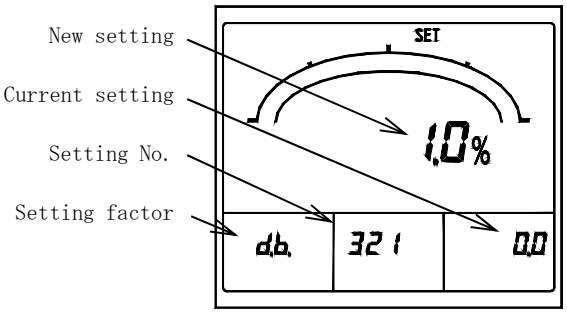

Dead band of measurement

◆ 322 Tidal current measurement

By measurement of reactive power and a power-factor, 0 (general measurement) or 1 (tidal current measurement which was conscious of power transmission/power receiving) can be selected.
Selection by [+] and [−], set value is updated by [SET].
Default setting : 0 (General measurement)

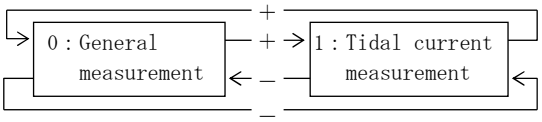

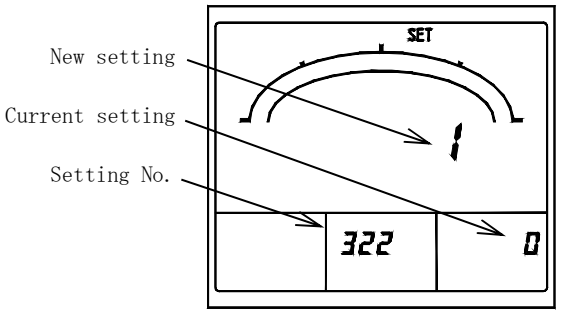

Tidal current measurement

(General measurement)

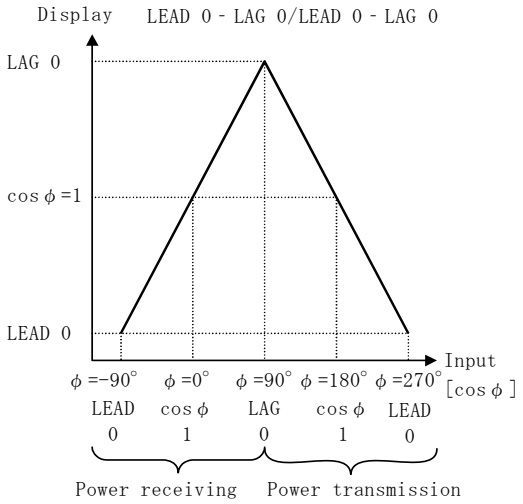

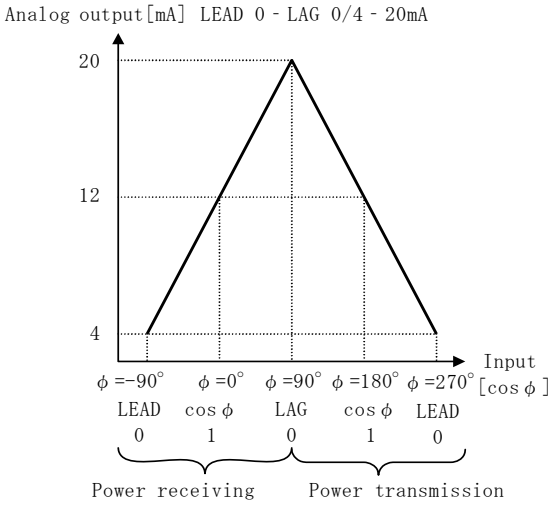

(Tidal current measurement)

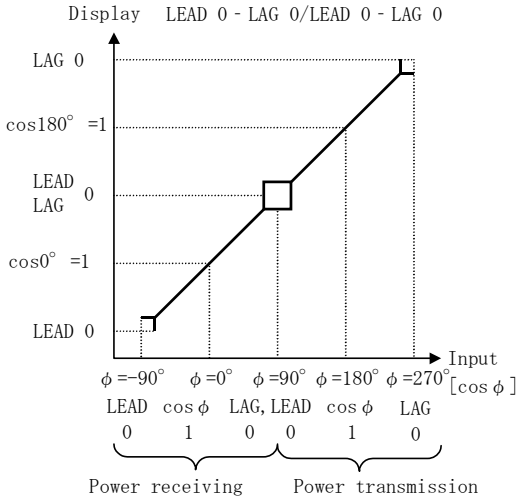

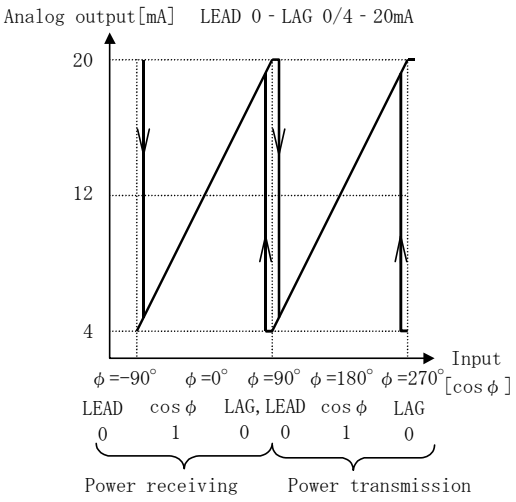

(3) 331 Analog output specification setting 【With analog output (DC0 - 5V or DC1 - 5V)】
Set the specification of analog output (DC0 - 5V／DC1 - 5V).
Selection by [＋] and [－], set value is updated by [SET].
Default setting : DC1 - 5V or DC0 - 5V (Designation)

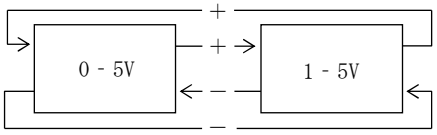

<Note> This setting does not exist at the time of an analog output insulation product.

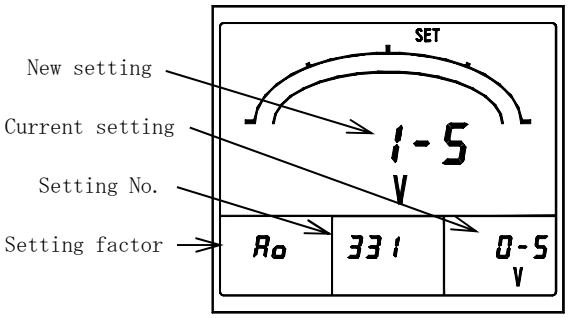

Analog output specification

(4) 341 to 348 Analog output adjustment 【With analog output】
The bias and span of each analog output are adjusted.

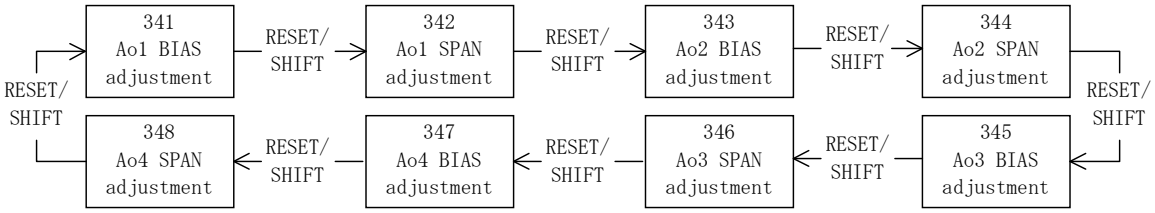

◆ 341 AO(Analog output)1 bias adjustment,
343 AO(Analog output)2 bias adjustment,
345 AO(Analog output)3 bias adjustment,
347 AO(Analog output)4 bias adjustment.

The bias of each analog output is adjusted.
Setting range : ±10.0% (0.1% step)
Selection by [＋] and [－], set value is updated by [SET].

◆ 342 AO(Analog output)1 span adjustment,
344 AO(Analog output)2 span adjustment,
346 AO(Analog output)3 span adjustment,
348 AO(Analog output)4 span adjustment.

The span of each analog output is adjusted.
Setting range : ±10.0% (0.1% step)
Selection by [＋] and [－], set value is updated by [SET].

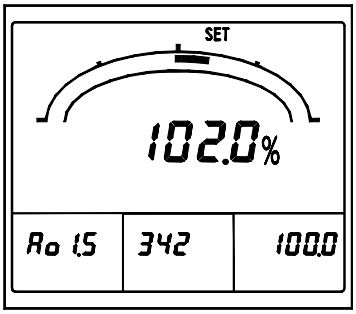

Ao1 span adjustment

6. Specification

6.1 Specification and intrinsic error.

Input circuit	Input	
3-phase 3-wire Single-phase 2-wire	AC110V, 220V common use. AC 5A or AC 1A 50/60Hz Designation	
Single-phase 3-wire	AC100-200V (44) AC 5A or AC 1A 50/60Hz Designation	
Zero-phase current	Rated sensitivity current value. 0.03A / 0.05A / 0.1A / 0.2A / 0.4A / 0.8A	Only with leakage measurement

Measurement item	Measurement range / Display specification		Current input	Voltage input	Intrinsic error (45) Digital display	Intrinsic error (45) Analog output Pulse output (46)	Maximum measur-ement	Minimum measur-ement	Note
Voltage	AC150V to 750.0kV (34 range)			○	±1.0%	±0.5%	○	○	L1L2-L2L3-L3L1 line change (47)
Current	Maximum demand (55), Demand, Instant AC5.00A to 30.0kA (76 range)		○		±1.0%	±0.5%	○	○	L1-L2-L3 phase change (48) Possible to set a range of indication and output apart from the CT ratio.
Active power	Maximum demand (55), Demand, Instant 200W to 1000MW (Range select) In voltage and current range. One-side swing or both side swings can be setting.				±1.0%	±0.5%	○	○	Range of an analog output can be set as indication independently. (49) (50)
Reactive power	LEAD,LAG 150var to 1000Mvar (Range select) In voltage and current range.				±1.0%	±0.5%	○	○	Range of an analog output can be set as indication independently. (50)
Power factor	LEAD 0.500 - 1.000 - LAG 0.500 or LEAD 0.000 - 1.000 - LAG 0.000 Range select				±2.0%	±2.0%	○	○	In case input is below 20% of voltage range or below 2% of current range : $\cos\phi$=1. (Output is $\cos\phi$=1 equivalence)
Frequency	45.0 - 55.0Hz or 55.0 - 65.0Hz or 45.0 - 65.0Hz Range select			○	±0.5%	±0.5%	○	○	0.0Hz in case input is below 20% of voltage range. Output is a lower limit value. (Lower limit value -1% : % for output span)
Current leakage (51) Io method, Igr method	Current leakage AC0.03A to 0.8A (6 range)		○	○	±2.5% (52)	±2.5% (52)	○		% for rated sensitivity current value. An input (ZCT primary) 3mA or less becomes zero display.
Distortion factor	Voltage	0.0 to 20.0% (Second to 15th harmonic) L1L2-L2L3 (53)		○	±1.0%	±2.5%	○		Digital display is % to 100% of distortion factors.
	Current	0.0 to 100.0% (Second to 15th harmonic) L1-L3 (54)	○		±2.5%	±2.5%	○		
Harmonic nth effective value	Voltage	AC150V to 750.0kV (34 range) n=3, 4, 5, 7, 9, 11, 13, 15, and fundamental wave. L1L2-L2L3 (53)		○	±1.5%	±1.5%	○		Digital display is % to a voltage range.
Fundamental -wave effective value	Current	AC5.00A to 30.0kA (76 range) n=3, 4, 5, 7, 9, 11, 13, 15, and fundamental wave. L1-L3 (54)	○		±1.5%	±1.5%	○		Digital display is % to a current range.

Measurement item	Measurement range / Display specification		Current input	Voltage input	Intrinsic error (45)		Maximum measur-ement	Minimum measur-ement	Note
					Digital display	Analog output Pulse output (46)			
Harmonic nth content	Voltage	0.0 to 20.0% n=3,4,5,7,9,11,13,15 L1L2-L2L3 (53)		○	±1.0%	±2.5%	○		Digital display is % to 100% of content.
	Current	0.0 to 100.0% n=3,4,5,7,9,11,13,15 L1-L3 (54)	○		±2.5%	±2.5%	○		
Harmonic 5th conversion effective value	Voltage	AC150V to 750.0kV (34 range) L1L2-L2L3 (53)		○	±1.5%	±1.5%	○		Digital display is % to a voltage range.
	Current	AC5.00A to 30.0kA (76 range) L1-L3 (54)	○		±1.5%	±1.5%	○		Digital display is % to a current range.
Harmonic 5th conversion content	Voltage	0.0 to 20.0% L1L2-L2L3 (53)		○	±1.0%	±2.5%	○		Digital display is % to 100% of content.
	Current	0.0 to 100.0% L1-L3 (54)	○		±2.5%	±2.5%	○		
Watt-hour	Display : Integer, 5 digit. Multiplier : Integral number times of 10. Possible to indicate it to 3 decimal place. Electric power is integrated. (Power receiving, Power transmission)				Power factor 1 : ±2.0% Power factor 0.5 : ±2.5%	Power factor 1 : ±2.0% Power factor 0.5 : ±2.5%			Conformity with normal watt-hour meter. Setting range of pulse output unit (kWh/pulse) is referred to option-specification.
var-hour	Display : Integer, 5 digit. Multiplier : Integral number times of 10. Possible to indicate it to 3 decimal place. Integrating reactive power of power receiving. (LAG·LEAD) Integrating reactive power of power transmission. (LAG·LEAD)				Power factor 0 : ±2.5% Power factor 0.87 : ±2.5%	Power factor 0 : ±2.5% Power factor 0.87 : ±2.5%			Setting range of pulse output unit (kvarh/pulse) is referred to option-specification.

Note (44) The rated voltage of each phase and L3 phase is 100V. However, the full scale of a bar graph is 300V.

Note (45) If this unit directly measures an inverter output of cycle control, SCR phase angle control or PWM, an error may increase due to its operation principle.
As for harmonic 5th conversion effective value and nth harmonic effective value, a display will be zero by 0.2% or less of the measurement range. And, analog output constitutes lower limit output. At this time, a distortion factor, harmonic 5th conversion content rate, and nth harmonic content also become 0% (analog output is lower limit output). As for a distortion factor, harmonic 5th conversion effective value / content, and nth harmonic effective value / content, fundamental-wave effective value constitutes zero by 3% or less of the measurement range.

Note (46) Analog output and pulse output are options.
Analog output of harmonic distortion factor and harmonic content : It becomes an upper limit output from a lower limit output, for current 0 to 100% and voltage 0 to 20%.
The analog output of current leakage constitutes an upper limit output to leakage sensitivity current value. (Only with leakage measurement)

Note (47) Single-phase 3-wire : L1N-L3N-LIL3, Single-phase 2-wire : With no phase display.

Note (48) Single-phase 3-wire : L1-L3-N, Single-phase 2-wire : With no phase display.

Note (49) At the case of one side swing setting of bar graph. Digital meter measures reverse power to -15% full scale. (Instantaneous power)

Note (50) Active power, reactive power display digit.
A full scale display is below 4000 : 4 digits display. A full scale display is 4000 or more : 3 digits display.
Example) 4800kW → 4.80MW
40kvar → 40.0kvar
20kW → 20.00kW Please refer to an appendix table for details.

Note (51) Only with leakage measurement. However, current input product constitute only Io method.

Note (52) The error of ZCT is not included. However, leakage detection sensitivity current below 0.1A constitutes ±0.0025A (ZCT primary).

Note (53) Single-phase 3-wire : L1N-L3N, single-phase 2-wire : With no phase display, line display.

Note (54) Single-phase 3-wire : L1-L3, single-phase 2-wire : With no phase display

Note (55) The maximum value (maximum demand current, others) minimum value can be checked in the maximum and the minimum measurement mode.

Item	Specification	
Bar graph display	Bar graph display of the main-monitor factor is done. (Watt-hour and var-hour exclude) A display of a sub-monitor factor can also be set.	
Operating method	Current, Voltage : Effective value computing type. Demand ammeter : Arithmetic method according with bimetallic type. Demand active power meter : Arithmetic method according with bimetallic type, or average value within the demand time limit. (One side is selected by setting.) Active power, Reactive power, Watt-hour, var-hour : Time-division multiplication method. Power factor : Average value within instant measurement or the demand time limit. (One side is selected by setting.) Calculates for active power and reactive power. Frequency : Zero cross cycle computing type. Current leakage : Fundamental-wave effective-value arithmetic method. Harmonic : FFT computing type.	
Interval setting	Demand current	0 second / 5 seconds / 10 seconds / 20 seconds / 30 seconds / 40 seconds / 50 seconds / 1 minute / 2 minutes / 3 minutes / 4 minutes / 5 minutes / 6 minutes / 7 minutes / 8 minutes / 9 minutes / 10 minutes / 15 minutes / 20 minutes / 25 minutes / 30 minutes (95% time limit)
	Demand active power	
	Harmonic measurement	Average time limit : 0 minute / 1 minute / 2 minutes / 5 minutes / 10 minutes / 15 minutes / 30 minutes Average measurement.
The factor in which display setting is possible	Main monitor	Voltage(L1L2-L2L3-L3L1), Current(L1-L2-L3), Demand current(L1-L2-L3), Active power, Demand active power, Reactive power, Power factor, Frequency, Current leakage, Watt-hour(Power receiving, Power transmission), var-hour(Power receiving LAG/LEAD, Power transmission LAG/LEAD), Distortion factor(A, V)
	Sub-monitor (Left)	Voltage(L1L2-L2L3-L3L1), Current(L1-L2-L3), Active power, Reactive power, Power factor, Current leakage
	Sub-monitor (Center)	Voltage(L1L2-L2L3-L3L1), Current(L1-L2-L3), Demand current(L1-L2-L3), Active power, Demand active power, Reactive power, var-hour(Power receiving LAG/LEAD, Power transmission LAG/LEAD), Harmonic 5th conversion content(A, V), Harmonic nth content(A, V)
	Sub-monitor (Right)	Voltage(L1L2-L2L3-L3L1), Current(L1-L2-L3), Demand current(L1-L2-L3), Active power, Demand active power, Power factor, Frequency, Watt-hour(Power receiving, Power transmission), Fundamental-wave effective value(A, V), Harmonic 5th conversion content(A, V), Harmonic nth effective value(A, V)
	Bar graph	Voltage(L1L2-L2L3-L3L1), Current(L1-L2-L3), Demand current(L1-L2-L3), Active power, Demand active power, Reactive power, Power factor, Frequency, Current leakage, Distortion factor(A, V), Harmonic 5th conversion content(A, V), Harmonic nth content(A, V), Fundamental-wave effective value(A, V), Harmonic 5th conversion effective value(A, V), Harmonic nth effective value(A, V)
Option	Analog output (4 sets) Contact output (2 sets. Select of pulse output or alarm output or CPU error output.) External operation change input (2 sets)	

● About power and reactive power full scale range selection

The power range and reactive power range is automatically decided in a current range and voltage range.
The full scale range of a bar graph can be selected out of the following values within a 40 to 115% (range of power) and 30 to 115% (range of reactive power), assuming that the rated power (VT ratio × CT ratio)([56]) is 100%.
1.0 / 1.2 / 1.4 / 1.5 / 1.6 / 1.8 / 2.0 / 2.4 / 2.5 / 2.8 / 3.0 / 3.2 / 3.6 / 4.0 / 4.2 / 4.5 / 4.8 / 5.0 / 5.6 / 6.0 / 6.4 / 7.2 / 7.5 / 8.0 / 8.4 / 9.0 / 9.6 $\times 10^n$

Example) In case of VT ratio × CT ratio = 1200kW
A full scale range can be selected from the following.
480 / 500 / 560 / 600 / 640 / 720 / 750 / 800 / 840 / 900 / 960 / 1000 / 1200

Note ([56]) Assume VT ratio is “2” for calculation in case of 220V input specifications and also assume CT ratio is CT ratio ÷ 5 in case of 1A input specifications.

● Measurement is possible range.

Measurement factor			Input (57)	Measurement is possible range		Remarks
				Display	Analog output	
Voltage			AC0 - 150V [AC0 - 300V]	101% of meter full scale.	101% of output span.	
Current			AC0 - 5A [AC0 - 1A]	120% of input rating.	120% of output span.	Instant, Demand
Power			0 - 1kW (0 - 200W) [0 - 2kW (0 - 400W)]	120% of input rating.	-1% and 120% of output span,	Instant, Demand
Reactive power			LEAD 1 - 0 - LAG 1kvar (LEAD 200 - 0 - LAG 200var) [LEAD 2 - 0 - LAG 2kvar (LEAD 400 - 0 - LAG 400var)]	120% of input rating.	-1% and 120% of output span,	
Power factor			LEAD 0 - 1 - LAG 0	LEAD 0.000 - 1 - LAG 0.000	0% and 100% of output span,	
			LEAD 0.5 - 1 - LAG 0.5	LEAD 0.490 - 1 - LAG 0.490	-1% and 101% of output span,	
Frequency			45 - 55Hz	44.9 - 55.1Hz	-1% and 101% of output span,	
			55 - 65Hz	54.9 - 65.1Hz		
			45 - 65Hz	44.8 - 65.2Hz		
Current leakage			AC0 to Rated sensitivity current value	120% of 0.8A	120% of output span.	
Harmonic	Effective value	Current	AC0 - 5A [AC0 - 1A]	120% of input rating.	120% of output span.	
		Voltage	AC0 - 150V [AC0 - 300V]	101% of meter full scale.	101% of output span.	
	Rate of content	Current	0 to 100%	120%	120% of output span.	
		Voltage	0 to 20%	100%	120% of output span.	

Note (57) [ ] is the 300V input case. ( ) is the 1A input case.

6.2 Specification, Performance.

Item	Specification				
Accuracy	Reference to measure specification and accuracy				
Accuracy of bar graph	±10% (% for span)				
Influence by temperature	23±10℃ within accuracy.				
Conformity technical standard	JIS C 1102-1, -2, -3, -4, -5, -7 : 1997 , JIS C 1111 : 1989 , JIS C 1216 : 1995 , JIS C 1263 : 1995 , JIS C 8374 : 1991				
Display updating time	About 1 second (Bar graph : 0.25 seconds) (Current leakage measurement : Digital and bar graph is 2 seconds or less. Harmonic measurement : Digital and bar graph is 10 seconds or less.)				
Display device Display composition	LCD	Main monitor	5 digit, character height 11mm		
		Sub-monitor (Left)	4 digit, character height 6mm		
		Sub-monitor (Center),(Right)	5 digit, character height 6mm		
		Bar graph	20 dots		
LCD view angle	Standard	For upper installation (For lower view)	Upper view angle 10° , Lower view angle 60° , Right and left view angle 60°		
	Special	For lower installation (For upper view)	Upper view angle 60° , Lower view angle 10° , Right and left view angle 60°		
Backlight	LED backlight : White Always-on, Auto off (after 5 minutes without operating), Always-off. Setting is possible. Backlight can select brightness from five steps of 1 to 5.				
Auxiliary supply	(1) AC85 - 264V 50/60Hz 10VA (Rated voltage, AC100/110V, 200/220V) DC80 - 143V 6W (Rated voltage, DC100/110V) for both AC and DC uses				
	(2) DC20 - 56V 6W (Rated voltage, DC24/48V)				
Rush current (Time constant)	Rated voltage AC110V 2.2A or less (About 3.6ms)				
	Rated voltage AC220V 4.4A or less (About 3.6ms)				
	Rated voltage DC110V 1.6A or less (About 3.6ms)				
	Rated voltage DC24V 5.0A or less (About 2.0ms)				
	Rated voltage DC48V 9.9A or less (About 2.0ms)				
Input consumption VA	Voltage circuit	0.1VA or less (110V) , 0.2VA or less (220V)			
	Current circuit	0.1VA or less (5A,1A)			
Overload capacity	Voltage circuit	2 times 10 seconds, 1.2 times continuation of rated voltage.			
	Current circuit	40 times 1 second, 20 times 4 seconds, 10 times 16 seconds, 1.2 times continuation of rated current.			
	Auxiliary supply	1.5 times 10 seconds, 1.2 times continuation of rated voltage. In case of DC110V, 1.5 times 10 seconds, 1.3 times continuation of rated voltage.			
Insulation resistance JIS C 1102-1 (58) JIS C 1111	Between electric circuits and case (Earth).		Above 50MΩ at DC500V		
	Between input and output and auxiliary supply.				
	Between analog output and pulse output and alarm output.				
	Between pulse outputs.				
	Between alarm outputs.				
	Between analog outputs.		Non-insulation (minus common) Above 50MΩ at DC500V megger		Designation
Withstand voltage (58) JIS C 1102-1 JIS C 1111	Between electric circuits and case (Earth).		AC2000V (50/60Hz) 1 minute		
	Between input and output and auxiliary supply.				
	Between analog output and pulse output and alarm output.		AC1500V (50/60Hz) 1 minute		
	Between pulse outputs.				
	Between alarm outputs.				
	Between analog outputs.		Non-insulation (minus common) AC500V (50/60Hz) 1 minute		Designation
Impulse withstand voltage JIS C 1111	Between auxiliary supply and case (Earth). (Only with leakage measurement)		7kV 1.2/50μs Both positive and negative polarities, for each 3 time.		
	Between electric circuits and case (Earth). (An analog output is excluded)		6kV 1.2/50μs Both positive and negative polarities, for each 3 time.		
	Between analog output and case (Earth).		5kV 1.2/50μs Both positive and negative polarities, for each 3 time.		

Note (58) A voltage input and a leakage input are not insulated. Please use it combining ZCT.

Item	Specification
Noise-capacity ANSI C37.90a JEA B-402 IEC801-2	(1) Oscillatory surge voltage If a vibration damping waveform (1 to 1.5MHz, Peak voltage : 2.5 to 3kV) is repeated and added, a measurement error should be within 10%. And, there needs to be no malfunction. Voltage input circuit (Normal / Common), Current input circuit (Common. Zero-phase current input circuit is excluded.) Auxiliary supply circuit (Normal / Common) (2) Square wave impulse noise If a noise (1μs, 100ns width) is repeated and added, a measurement error should be within 10%. And, there needs to be no malfunction. Auxiliary supply circuit (Normal / Common) Over 1500V Voltage input circuit (Normal / Common) Over 1500V Current input circuit (Common) Over 1500V (Zero-phase current input circuit is excluded) Pulse output (Common) Over 1000V Alarm output (Common) Over 1000V Operation input (Common) Over 1000V Analog output circuit (Induction) Over 1000V (3) Electric wave noise If intermittence irradiation of the electric wave of a 150,400,900MHz band is done by (5W, 1m), a measurement error should be within 10%. And, there needs to be no malfunction. (4) Electrostatic noise It is within 10% of errors in 8kV electrostatic noise at the case of an energization. There needs to be no 10kV damage at the case of a non-energization. Condenser charge form.
Vibration, Shock JIS C 1102-1 JIS C 0040, JIS C 0041	Vibration : Single amplitude 0.15mm, 10 to 55Hz, Each minute octave in 5 times sweep Shock : 490m/s^2 It is each 3 times to the X,Y,Z direction.
Construction	Dimension : 110mm(Width)×110mm(Height)×103.5mm(Depth) Body diameter : 99mmφ With terminal cover
Material	Case, Cover : ABS(V-0) , Terminal block : PBT , Terminal cover : Polycarbonate
Color	Black (Munsell N1.5)
Mass	Approx. 600g
Blackout guarantee	Maximum value, Minimum value, Integrates value and each setting value. Data hold by nonvolatile memory.
Operating temperature and humidity limits	-10 to +55℃, 30 to 85% RH, Non condensing.
Storage temperature limits	-25 to +70℃

6.3 Option

<table>
<tr><th>Item</th><th colspan="7">Specification</th></tr>
<tr><td rowspan="5">Analog output</td><td>Number of output</td><td colspan="6">4 circuits</td></tr>
<tr><td rowspan="2">Output specification</td><td colspan="3">Analog output non-insulation type</td><td colspan="3">Analog output insulation type</td></tr>
<tr><td colspan="3">DC4 - 20mA (Below 550Ω)
DC0 - 1mA (Below 10kΩ)
DC0 - 5V/1 - 5V (Over 600Ω)
DC0 - 10V (Over 2kΩ)
One of them is designated by identical ratings.</td><td colspan="3">DC4 - 20mA (Below 550Ω)
DC1 - 5V (Over 600Ω)
One of them is designated by identical ratings.</td></tr>
<tr><td>Output factor</td><td colspan="6">Voltage(L1L2-L2L3-L3L1), Current(L1-L2-L3), Demand current(L1-L2-L3), Active power, Demand active power, Reactive power, Power factor, Frequency,
Current leakage (Only with leakage measurement), Distortion factor(A, V),
Fundamental-wave effective value (Maximum value of each A/V phase),
Harmonic 5th conversion content (Maximum value of each A/V phase),
Harmonic 5th conversion effective value (Maximum value of each A/V phase),
Harmonic nth content (Maximum value of each A/V phase),
nth harmonic effective value (Maximum value of each A/V phase)</td></tr>
<tr><td>Response time</td><td colspan="6">1 second or less (Time within ±1% of final constant value.)
Leakage measurement is 2 seconds or less. Harmonic measurement is 10 seconds or less.</td></tr>
<tr><td>Output ripple</td><td colspan="6">Within the double precision of accuracy (% for output span)</td></tr>
<tr><td>Pulse output (60)</td><td colspan="7">Possible output : Watt-hour or var-hour.
Output form : Optical MOS-FET relay. 1a contact
Contact capacity : AC, DC125V, 70mA (Resistance load, inductive load)
Pulse width : 250±10ms (Output pulse width when the output pulse period of rated active power constitutes speed more than 2 pulse/second by setting of an voltage measurement range, a current-measurement range, and an output pulse unit is set to 100 to 130ms.)
Setting of output pulse unit is possible by the next range.
■ 3-phase 3-wire : Full load power (kW,kvar)＝$\sqrt{3}$×Rated voltage(V)×Rated current(A)×10^{-3}
■ Single-phase 3-wire : Full load power (kW,kvar)＝2×Rated voltage(V)×Rated current(A)×10^{-3}
■ Single-phase 2-wire : Full load power (kW,kvar)＝Rated voltage(V)×Rated current(A)×10^{-3}</td></tr>
<tr><td colspan="2">Full load power (kW,kvar)</td><td colspan="4">Output pulse unit. kWh(kvarh)/pulse</td><td>Multiplying factor</td></tr>
<tr><td colspan="2">Below 1</td><td>0.1</td><td>0.01</td><td>0.001</td><td>0.0001</td><td>0.01 (59)</td></tr>
<tr><td>Over 1</td><td>Below 10</td><td>1</td><td>0.1</td><td>0.01</td><td>0.001</td><td>0.1</td></tr>
<tr><td>Over 10</td><td>Below 100</td><td>10</td><td>1</td><td>0.1</td><td>0.01</td><td>1</td></tr>
<tr><td>Over 100</td><td>Below 1,000</td><td>100</td><td>10</td><td>1</td><td>0.1</td><td>10</td></tr>
<tr><td>Over 1,000</td><td>Below 10,000</td><td>1,000</td><td>100</td><td>10</td><td>1</td><td>100</td></tr>
<tr><td>Over 10,000</td><td>Below 100,000</td><td>10,000</td><td>1,000</td><td>100</td><td>10</td><td>1,000</td></tr>
<tr><td>Over 100,000</td><td>Below 1,000,000</td><td>100,000</td><td>10,000</td><td>1,000</td><td>100</td><td>10,000</td></tr>
</table>

Note(59) Although multiplying factor is 0.01, a multiplying factor display will be 0.1.
(The place by the integer is 4 digits display. An enlarged display is 4 digits below decimal point.)

Note(60) 2 outputs combination is possible, for pulse output and alarm output and CPU error output.
(CPU error output is 1 point only)

<table>
<tr><th>Item</th><th colspan="4">Specification</th></tr>
<tr><td rowspan="15">Alarm output
(61)</td><td colspan="4">Alarm factor : Demand current, Demand active power, Current leakage, harmonic 5th conversion content, Harmonic nth content, Distortion factor, Voltage, Alarm OFF.
Possible to setting one of them.
Reset form : Automatic reset or Manual reset (Setting)
Output contact : No-voltage a contact (OR of each phase detection)
Contact capacity : AC250V 8A, DC125V 0.3A (Resistance load) AC250V 2A, DC125V 0.1A (Inductive load)</td></tr>
<tr><td>Alarm factor</td><td>Item</td><td colspan="2">Specification</td></tr>
<tr><td rowspan="3">Demand current,
Demand active power</td><td>Function</td><td colspan="2">Demand measurement value ≧ Upper limit setting value,
Alarm display, Alarm output.</td></tr>
<tr><td>Setting accuracy</td><td colspan="2">±1.0% (% for full scale)</td></tr>
<tr><td>Setting range</td><td colspan="2">5 to 100% to the maximum scale. (1% step)</td></tr>
<tr><td rowspan="4">Current leakage
(Only with leakage measurement)</td><td>Sensitivity current</td><td colspan="2">50 to 100% (% for rated sensitivity current value)</td></tr>
<tr><td>Rated sensitivity current value</td><td colspan="2">0.03A / 0.05A / 0.1A / 0.2A / 0.4A / 0.8A</td></tr>
<tr><td>Operating time</td><td colspan="2">Time-delay type (It exceeds 0.1 seconds and is 2 or less seconds.)</td></tr>
<tr><td>Test function</td><td colspan="2">The functional test of the current-leakage detection by the test mode is possible.</td></tr>
<tr><td rowspan="4">Harmonic 5th conversion content

Harmonic nth content

Distortion factor</td><td>Function</td><td colspan="2">Measurement value ≧ Upper limit setting value,
Alarm display, Alarm output. (Detects by the maximum phase)</td></tr>
<tr><td>Setting accuracy</td><td colspan="2">Current : ±2.5%, Voltage : ±1.0%, % to 100% of content rate.</td></tr>
<tr><td>Setting range</td><td>Current</td><td>Harmonic 5th conversion content, Harmonic nth content (n=3,4,5,7,9,11,13,15), Distortion factor.
5 to 100% (1% step)</td></tr>
<tr><td>Detection characteristics</td><td>Voltage</td><td>Harmonic 5th conversion content, Harmonic nth content (n=3,4,5,7,9,11,13,15), Distortion factor.
1.0 to 20.0% (0.1% step)</td></tr>
<tr><td>Voltage</td><td>Function</td><td colspan="2">Average value mode : It will detect, if a par measurement value becomes beyond the above setting.
Inverse-time-delay mode : It detects in the inverse-time-delay characteristics of instantaneous value (only a harmonic 5th conversion content is possible).</td></tr>
<tr><td rowspan="3"></td><td colspan="2">Measurement value ≧ Upper limit setting value,
Alarm display, Alarm output. (Detects by the maximum phase)
Measurement value ≦ Lower limit setting value,
Alarm display, Alarm output. (Detects by the minimum phase)</td></tr>
<tr><td>Setting accuracy</td><td colspan="2">±1.0% (% for full scale)</td></tr>
<tr><td>Setting range</td><td colspan="2">Using a full scale as 150%. 30 to 150% (1% step)</td></tr>
<tr><td>CPU error output
(61)</td><td colspan="2">Detection item (Self-diagnostics item)
(1) Watchdog timer (Inside, outside)
(2) RAM check error
(3) A/D-conversion error
At the case of error detection and not applying for auxiliary supply, an output is ON.
It becomes OR output of a detection item.</td><td>Contact composition
b contact</td><td>Contact capacity
AC250V 5A, DC125V 0.2A (Resistance load)
AC250V 1.5A, DC125V 0.1A (Inductive load)</td></tr>
<tr><td rowspan="7">External operation input</td><td colspan="2">Number of circuits</td><td colspan="2">2 circuits, A function (four types) is changed by setting.</td></tr>
<tr><td colspan="2">Function</td><td colspan="2">Four types of following functions can be operated by adding a voltage signal from the outside in addition to switch operation.</td></tr>
<tr><td>Alarm reset</td><td colspan="2">Alarm output is reset (output OFF).</td></tr>
<tr><td>Maximum / Minimum value reset</td><td colspan="2">The maximum/minimum value is reset (it updates to the instantaneous value at the time).</td></tr>
<tr><td>Measurement factor change</td><td colspan="2">The measurement display element of the main monitoring is changed.</td></tr>
<tr><td>Phase change</td><td colspan="2">A phase/lines display of all the current/voltage currently displayed is changed.</td></tr>
<tr><td colspan="2">Minimum operation pulse width</td><td colspan="2">300ms , Continuation applying is possible.</td></tr>
<tr><td colspan="2">Rated input</td><td colspan="2">Input rating becomes the same as that of auxiliary supply.
(1) AC100/110V 0.4VA, AC200/220V 1.4VA, DC100/110V 0.4W AC DC two ways.
Contact capacity : About 3mA (AC,DC100/110V) , About 6mA (AC200/220V)
(2) DC24V 0.3W, DC48V 1.2W
Contact capacity : About 10mA (DC24V) , About 20mA (DC48V)</td></tr>
</table>

Note (61) 2 outputs combination is possible, for pulse output and alarm output and CPU error output.
(CPU error output is 1 point only)

● Caution on the use of external display selection input (option)
External power consumption is 0.4VA at AC110V or 1.4VA at AC220V or 0.4W at DC110V.
In case a relay or a switch is used for power-supply supply, please use the thing of about 1mA of the minimum application loads.

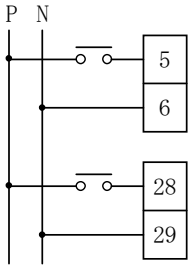

7. Maintenance and check

7.1 Trouble shooting

Symptoms	Possible causes	Remedial measures
Does not display.	The power supply is not supplied. (Not connected. or voltage is low)	Check the auxiliary supply. Again, a power supply is supplied.
	Measurement display ON/OFF setting is set to OFF.	Setting check.
	Trouble of device.	Replace the device.
Measuring value error is noticeable	Range is not set correctly.	Please set again.
	Out of range in rated frequency (45 - 65Hz).	Cannot be used.
	Cycle control, SCR phase angle control, PWM, or other inverter output is measured.	Cannot be used.
Measurement display of current leakage Igr will be "----".	The direction of the connection to ZCT or this product is reverse.	Please do connection correctly.
	The cable run constitutes a negative phase sequence.	Please change a setting (No.163) into "1 : one phase earth (negative phase sequence)".
Analog output is not outputted.	Analog output is set to OFF or measurement factor is set to OFF.	Please check a setting
Pulse output is not outputted.	Pulse output is set to OFF or measurement factor is set to OFF.	Please check a setting
Alarm output does not return.	The return method is a "manual reset".	Please check a setting

7.2 Check

Be careful with the following items periodically.

(1) Check if the measuring values, scale digits, units, etc. are displayed correctly.

(2) Check if LCD is free of a color change, breakage of case, or other defects.

(3) Check the unit for loose wiring and loose mounting screws.

(4) Please remove, if dust has adhered to the product.

7.3 Maintenance

(1) Please do not make a wiring change of the input and auxiliary supply in an energization.

(2) In case you check an output in an energization, please warn to be unable to touch output wiring and a human body to an input and an auxiliary supply terminal. (Please do not short-circuit a voltage output.)

(3) Please check a connection diagram, in case you check the voltage of input, output, and auxiliary supply.

(4) If a name-plate is wiped with solvents (an alcoholic nature), a display item may disappear.
Please wipe off with the dry cloth.

7.4 Test

In case this product is tested, a special setting or operation is not needed fundamentally.
However, the following test should operate it along with each process.

(1) Alarm-output test

Even if this product does not have input, it can perform ON/OFF test of an alarm output (relay-contact output).
Operation is performed by alarm 1 test and alarm 2 test in the setting mode 1.
Please refer to "5.3.1 Setting mode 1 (2) alarm-output setup" about the details of operation.

In case an alarm-output factor is a current leakage (Io/Igr).

While pushing SET, the test input exceeding rated sensitivity current value is applied to the zero-phase current input circuit inside a product. If the time that is pushing [SET] exceeds the operating time (it exceeds time-delay form 0.1 seconds, and is 2 or less seconds) of a current leakage, an alarm will occur.
And, test input will become off if [SET] is detached. Please be sure to apply rated voltage to voltage input terminal (between P1-P2) at this time.

In addition, an alarm return constitutes action corresponding to a return method setting (automatic reset / manual reset) of each alarm output.

< Operating process >

・Alarm 1 test (Setting No. 124)

(111) (121) (124)
Press [SET] for 3 seconds → Press [MODE] → Press [RESET/SHIFT] for 3 times → While pushing [SET], the alarm 1 output is ON.

・Alarm 2 test (Setting No. 128)

(111) (121) (128)
Press [SET] for 3 seconds → Press [MODE] → Press [RESET/SHIFT] for 7 times → While pushing [SET], the alarm 2 output is ON.

・In case an alarm-output factor is current leakage (Io/Igr) ··· Example) ALARM 2

(111) (121) (128)
Press [SET] for 3 seconds → Press [MODE] → Press [RESET/SHIFT] for 7 times

→ If it continues pushing [SET] for a long time from the current-leakage operating time, alarm 2 output is ON.

(2) Harmonic time-interval test

Please test by the following operation about the time interval of a harmonic. An error becomes large, in case it tests without performing the following operation.
Operation is performed with the average time interval in the setting mode 1.
Please refer to "5.3.1 setting mode 1 (4) harmonic detection setting" for operation details.

< Operating process > (Setting No. 14A)

(111) (141) (14A)
Press [SET] for 3 seconds → Press [MODE] for 3 times → Press [RESET/SHIFT] for 9 times

→ Please press [SET] simultaneously with a test start.

Please press [DISPLAY] and return to a measurement screen.

7.5 Storage

(1) Please avoid storage in the next space. Low temperature, high temperature, high humidity, and sunny place.

(2) The aluminum electrolytic capacitor is used for a product. Please do the energization of the power supply within one year after shipment.

7.6 Countermeasures against troubles

As our principle, we recall product in question and repair it. If judged as product failure, have a contact with us or sales agent for repairing work (Also have a contact with us or sales agent for specification change).
Product failure which we are not responsible for (When responsibility in manufacturing process is not recognized, when product is disassembled/remodeled, in case of false operation by customer, etc.) is beyond our warranty.

Appendix table 1-1

Active power range, watt-hour multiplier rate table (3-phase 3-wire)

Multiplier rate	V range / A range	750.0kV (VT550000/110V) [W]	500.0kV (VT380000/110V) [W]	375.0kV (VT275000/110V) [W]	300.0kV (VT220000/110V) [W]	255.0kV (VT187000/110V) [W]	210.0kV (VT154000/110V) [W]	180.0kV (VT132000/110V) [W]	150.0kV (VT110000/110V) [W]	105.0kV (VT77000/110V) [W]	90.0kV (VT66000/110V) [W]	45.0kV (VT33000/110V) [W]	30.0kV (VT22000/110V) [W]	Multiplier rate
	5A	5.00 M	3600 k (3455)	2500 k	2000 k	1800 k (1700)	1400 k	1200 k	1000 k	720 k (700)	600 k	300.0 k	200.0 k	
	6A	6.00 M	4.20 M (4.15)	3000 k	2400 k	2000 k (2040)	1800 k (1680)	1500 k (1440)	1200 k	900 k (840)	720 k	360.0 k	240.0 k	
	7.5A	7.50 M	5.60 M (5.18)	4.00 M (3.75)	3000 k	2500 k (2550)	2400 k (2100)	1800 k	1500 k	1200 k (1050)	900 k	450 k	300.0 k	
	8A	8.00 M	5.60 M (5.53)	4.00 M	3200 k	3000 k (2720)	2400 k (2240)	2000 k (1920)	1600 k	1200 k (1120)	960 k	480 k	320.0 k	
×100	10A	10.00 M	7.20 M (6.91)	5.00 M	4.00 M	3600 k (3400)	2800 k	2400 k	2000 k	1400 k	1200 k	600 k	400 k	
	12A	12.00 M	8.40 M (8.29)	6.00 M	4.80 M	4.20 M (4.08)	3600 k (3360)	3000 k (2880)	2400 k	1800 k (1680)	1500 k (1440)	720 k	480 k	
	15A	15.00 M	10.00 M (10.36)	7.50 M	6.00 M	5.60 M (5.10)	4.20 M	3600 k	3000 k	2400 k (2100)	1800 k	900 k	600 k	
	20A	20.00 M	14.00 M (13.82)	10.00 M	8.00 M	7.20 M (6.80)	5.60 M	4.80 M	4.00 M	2800 k	2400 k	1200 k	800 k	
	25A	25.00 M	18.00 M (17.27)	14.00 M (12.50)	10.00 M	9.00 M (8.50)	7.20 M (7.00)	6.00 M	5.00 M	3600 k (3500)	3000 k	1500 k	1000 k	×10
	30A	30.00 M	20.00 M (20.73)	15.00 M	12.00 M	10.00 M (10.20)	8.40 M	7.20 M	6.00 M	4.20 M	3600 k	1800 k	1200 k	
	40A	40.0 M	28.00 M (27.64)	20.00 M	16.00 M	14.00 M (13.60)	12.00 M (11.20)	9.60 M	8.00 M	5.60 M	4.80 M	2400 k	1600 k	
	50A	50.0 M	36.00 M (34.55)	25.00 M	20.00 M	18.00 M (17.00)	14.00 M	12.00 M	10.00 M	7.20 M (7.00)	6.00 M	3000 k	2000 k	
	60A	60.0 M	42.0 M (41.5)	30.00 M	24.00 M	20.00 M (20.40)	18.00 M (16.80)	15.00 M (14.40)	12.00 M	8.40 M	7.20 M	3600 k	2400 k	
	75A	75.0 M	56.0 M (51.8)	40.0 M (37.5)	30.00 M	28.00 M (25.50)	24.00 M (21.00)	18.00 M	15.00 M	12.00 M (10.50)	9.00 M	4.50 M	3000 k	
	80A	80.0 M	56.0 M (55.3)	40.0 M	32.00 M	28.00 M (27.20)	24.00 M (22.40)	20.00 M (19.20)	16.00 M	12.00 M (11.20)	9.60 M	4.80 M	3200 k	
×1000	100A	100.0 M	72.0 M (69.1)	50.0 M	40.0 M	36.00 M (34.00)	28.00 M	24.00 M	20.00 M	14.00 M	12.00 M	6.00 M	4.00 M	
	120A	120.0 M	84.0 M (82.9)	60.0 M	48.0 M	42.0 M (40.8)	36.00 M (33.60)	30.00 M (28.80)	24.00 M	18.00 M (16.80)	15.00 M (14.40)	7.20 M	4.80 M	
	150A	150.0 M	100.0 M (103.6)	75.0 M	60.0 M	56.0 M (51.0)	42.0 M	36.00 M	30.00 M	24.00 M (21.00)	18.00 M	9.00 M	6.00 M	
	200A	200.0 M	140.0 M (138.2)	100.0 M	80.0 M	72.0 M (68.0)	56.0 M	48.0 M	40.0 M	28.00 M	24.00 M	12.00 M	8.00 M	
	250A	250.0 M	180.0 M (172.7)	140.0 M (125.0)	100.0 M	90.0 M (85.0)	72.0 M (70.0)	60.0 M	50.0 M	36.00 M (35.00)	30.00 M	15.00 M	10.00 M	×100
	300A	300.0 M	200.0 M (207.3)	150.0 M	120.0 M	100.0 M (102.0)	84.0 M	72.0 M	60.0 M	42.0 M	36.00 M	18.00 M	12.00 M	
	400A	400 M	280.0 M (276.4)	200.0 M	160.0 M	140.0 M (136.0)	120.0 M (112.0)	96.0 M	80.0 M	56.0 M	48.0 M	24.00 M	16.00 M	
	500A	500 M	360.0 M (345.5)	250.0 M	200.0 M	180.0 M (170.0)	140.0 M	120.0 M	100.0 M	72.0 M (70.0)	60.0 M	30.00 M	20.00 M	
	600A	600 M	420 M (415)	300.0 M	240.0 M	200.0 M (204.0)	180.0 M (168.0)	150.0 M (144.0)	120.0 M	84.0 M	72.0 M	36.00 M	24.00 M	
	750A	750 M	560 M (518)	400 M (375)	300.0 M	280.0 M (255.0)	240.0 M (210.0)	180.0 M	150.0 M	120.0 M (105.0)	90.0 M	45.0 M	30.00 M	
	800A	800 M	560 M (553)	400 M	320.0 M	280.0 M (272.0)	240.0 M (224.0)	200.0 M (192.0)	160.0 M	120.0 M (112.0)	96.0 M	48.0 M	32.00 M	
	900A	900 M	640 M (622)	450 M	360.0 M	320.0 M (306.0)	280.0 M (252.0)	240.0 M (216.0)	180.0 M	140.0 M (126.0)	120.0 M (108.0)	56.0 M (54.0)	36.00 M	
×10000	1000A	1000 M	720 M (691)	500 M	400 M	360.0 M (340.0)	280.0 M	240.0 M	200.0 M	140.0 M	120.0 M	60.0 M	40.0 M	
	1200A		840 M (829)	600 M	480 M	420 M (408)	360.0 M (336.0)	300.0 M (288.0)	240.0 M	180.0 M (168.0)	150.0 M (144.0)	72.0 M	48.0 M	
	1500A			750 M	600 M	560 M (510)	420 M	360.0 M	300.0 M	240.0 M (210.0)	180.0 M	90.0 M	60.0 M	
	1600A			800 M	640 M	560 M (544)	450 M (448)	400 M (384)	320.0 M	240.0 M (224.0)	200.0 M (192.0)	96.0 M	64.0 M	
	1800A			900 M	720 M	640 M (612)	560 M (504)	450 M (432)	360.0 M	280.0 M (252.0)	240.0 M (216.0)	120.0 M (108.0)	72.0 M	
	2000A			1000 M	800 M	720 M (680)	560 M	480 M	400 M	280.0 M	240.0 M	120.0 M	80.0 M	
	2500A				1000 M	900 M (850)	720 M (700)	600 M	500 M	360.0 M (350.0)	300.0 M	150.0 M	100.0 M	×1000
	3000A						840 M	720 M	600 M	420 M	360.0 M	180.0 M	120.0 M	
	4000A							960 M	800 M	560 M	480 M	240.0 M	160.0 M	
	5000A								1000 M	720 M (700)	600 M	300.0 M	200.0 M	
	6000A									840 M	720 M	360.0 M	240.0 M	
	7500A										900 M	450 M	300.0 M	
	8000A										960 M	480 M	320.0 M	
	9000A											560 M (540)	360.0 M	
	10000A											600 M	400 M	
	12000A											720 M	480 M	
	15000A											900 M	600 M	
	20000A												800 M	×10000
	30000A													

<Note 1>

Parenthesis is primary active power (reactive power) value in /1kW(1kvar).
In the blank, setting is impossible.
About active power and reactive power range.
Full scale display, less than 4000 : 4 digit. More than 4000 : 3 digit.
An example) 4800kW → 4.80MW
40kvar → 40.0kvar
20kW → 20.00kW

<Note 2>

In case the voltage range and the current range were set as [ ] of an upper table and an output pulse unit (a four-step setup is possible) is set as the fastest.
The output pulse width of a pulse output is set to 100 to 130ms. (Usually 240 to 260ms)

Appendix table 1-2

Active power range, watt-hour multiplier rate table (3-phase 3-wire)

Multiplier rate	V range / A range	25.00kV (VT18400/110V) [W]	24.00kV (VT16500/110V) [W]	18.00kV (VT13800/110V) [W]	18.00kV (VT13200/110V) [W]	15.00kV (VT11000/110V) [W]	9000V (VT6600/110V) [W]	4500V (VT3300/110V) [W]	3000V (VT2200/110V) [W]	2400V (VT1650/110V) [W]	1500V (VT1100/110V) [W]	1200V (VT880/110V) [W]	600V (VT480/110V) [W]	Multiplier rate
	5A	180.0 k (167)	150.0 k	140.0 k (125.5)	120.0 k	100.0 k	60.0 k	30.00 k	20.00 k	15.00 k	10.00 k	8.00 k	4.50 k (4.36)	
	6A	200.0 k (201)	180.0 k	160.0 k (150.5)	150.0 k (144.0)	120.0 k	72.0 k	36.00 k	24.00 k	18.00 k	12.00 k	9.60 k	5.60 k (5.24)	
	7.5A	280.0 k (251)	240.0 k (225.0)	200.0 k (188.2)	180.0 k	150.0 k	90.0 k	45.0 k	30.00 k	24.00 k (22.50)	15.00 k	12.00 k	7.20 k (6.55)	
	8A	280.0 k (268)	240.0 k	200.0 k (200.7)	200.0 k (192.0)	160.0 k	96.0 k	48.0 k	32.00 k	24.00 k	16.00 k	14.00 k (12.80)	7.20 k (6.98)	
	10A	360.0 k (335)	300.0 k	280.0 k (250.9)	240.0 k	200.0 k	120.0 k	60.0 k	40.0 k	30.00 k	20.00 k	16.00 k	9.00 k (8.73)	
	12A	420 k (401)	360.0 k	320.0 k (301.1)	300.0 k (288.0)	240.0 k	150.0 k (144.0)	72.0 k	48.0 k	36.00 k	24.00 k	20.00 k (19.20)	12.00 k (10.47)	×0.1
	15A	560 k (502)	450 k	400 k (376)	360.0 k	300.0 k	180.0 k	90.0 k	60.0 k	45.0 k	30.00 k	24.00 k	14.00 k (13.09)	
	20A	720 k (669)	600 k	560 k (502)	480 k	400 k	240.0 k	120.0 k	80.0 k	60.0 k	40.0 k	32.00 k	18.00 k (17.45)	
×10	25A	840 k (836)	750 k	640 k (627)	600 k	500 k	300.0 k	150.0 k	100.0 k	75.0 k	50.0 k	40.0 k	24.00 k (21.82)	
	30A	1000 k (1004)	900 k	800 k (753)	720 k	600 k	360.0 k	180.0 k	120.0 k	90.0 k	60.0 k	48.0 k	28.00 k (26.18)	
	40A	1400 k (1338)	1200 k	1000 k (1004)	960 k	800 k	480 k	240.0 k	160.0 k	120.0 k	80.0 k	64.0 k	36.00 k (34.91)	
	50A	1800 k (1673)	1500 k	1400 k (1255)	1200 k	1000 k	600 k	300.0 k	200.0 k	150.0 k	100.0 k	80.0 k	45.0 k (43.6)	
	60A	2000 k (2007)	1800 k	1600 k (1505)	1500 k (1440)	1200 k	720 k	360.0 k	240.0 k	180.0 k	120.0 k	96.0 k	56.0 k (52.4)	
	75A	2800 k (2509)	2400 k (2250)	2000 k (1882)	1800 k	1500 k	900 k	450 k	300.0 k	240.0 k (225.0)	150.0 k	120.0 k	72.0 k (65.5)	
	80A	2800 k (2676)	2400 k	2000 k (2007)	2000 k (1920)	1600 k	960 k	480 k	320.0 k	240.0 k	160.0 k	140.0 k (128.0)	72.0 k (69.8)	
	100A	3600 k (3345)	3000 k	2800 k (2509)	2400 k	2000 k	1200 k	600 k	400 k	300.0 k	200.0 k	160.0 k	90.0 k (87.3)	
	120A	4.20 M (4.01)	3600 k	3200 k (3011)	3000 k (2880)	2400 k	1500 k (1440)	720 k	480 k	360.0 k	240.0 k	200.0 k (192.0)	120.0 k (104.7)	×1
	150A	5.60 M (5.02)	4.50 M	4.00 M (3.76)	3600 k	3000 k	1800 k	900 k	600 k	450 k	300.0 k	240.0 k	140.0 k (130.9)	
	200A	7.20 M (6.69)	6.00 M	5.60 M (5.02)	4.80 M	4.00 M	2400 k	1200 k	800 k	600 k	400 k	320.0 k	180.0 k (174.5)	
×100	250A	8.40 M (8.36)	7.50 M	6.40 M (6.27)	6.00 M	5.00 M	3000 k	1500 k	1000 k	750 k	500 k	400 k	240.0 k (218.2)	
	300A	10.00 M (10.04)	9.00 M	8.00 M (7.53)	7.20 M	6.00 M	3600 k	1800 k	1200 k	900 k	600 k	480 k	280.0 k (261.8)	
	400A	14.00 M (13.38)	12.00 M	10.00 M (10.04)	9.60 M	8.00 M	4.80 M	2400 k	1600 k	1200 k	800 k	640 k	360.0 k (349.1)	
	500A	18.00 M (16.73)	15.00 M	14.00 M (12.55)	12.00 M	10.00 M	6.00 M	3000 k	2000 k	1500 k	1000 k	800 k	450 k (436)	
	600A	20.00 M (20.07)	18.00 M	16.00 M (15.05)	15.00 M (14.40)	12.00 M	7.20 M	3600 k	2400 k	1800 k	1200 k	960 k	560 k (524)	
	750A	28.00 M (25.09)	24.00 M (22.50)	20.00 M (18.82)	18.00 M	15.00 M	9.00 M	4.50 M	3000 k	2400 k (2250)	1500 k	1200 k	720 k (655)	
	800A	28.00 M (26.76)	24.00 M	20.00 M (20.07)	20.00 M (19.20)	16.00 M	9.60 M	4.80 M	3200 k	2400 k	1600 k	1400 k (1280)	720 k (698)	
	900A	32.00 M (30.11)	28.00 M (27.00)	24.00 M (22.58)	24.00 M (21.60)	18.00 M	12.00 M (10.80)	5.60 M (5.40)	3600 k	2800 k (2700)	1800 k	1500 k (1440)	800 k (785)	
	1000A	36.00 M (33.45)	30.00 M	28.00 M (25.09)	24.00 M	20.00 M	12.00 M	6.00 M	4.00 M	3000 k	2000 k	1600 k	900 k (873)	
	1200A	42.0 M (40.1)	36.00 M	32.00 M (30.11)	30.00 M (28.80)	24.00 M	15.00 M (14.40)	7.20 M	4.80 M	3600 k	2400 k	2000 k (1920)	1200 k (1047)	×10
	1500A	56.0 M (50.2)	45.0 M	40.0 M (37.6)	36.00 M	30.00 M	18.00 M	9.00 M	6.00 M	4.50 M	3000 k	2400 k	1400 k (1309)	
	1600A	56.0 M (53.5)	48.0 M	42.0 M (40.1)	40.0 M (38.4)	32.00 M	20.00 M (19.20)	9.60 M	6.40 M	4.80 M	3200 k	2800 k (2560)	1400 k (1396)	
	1800A	64.0 M (60.2)	56.0 M (54.0)	48.0 M (45.2)	45.0 M (43.2)	36.00 M	24.00 M (21.60)	12.00 M (10.80)	7.20 M	5.60 M (5.40)	3600 k	3000 k (2880)	1600 k (1571)	
	2000A	72.0 M (66.9)	60.0 M	56.0 M (50.2)	48.0 M	40.0 M	24.00 M	12.00 M	8.00 M	6.00 M	4.00 M	3200 k	1800 k (1745)	
×1000	2500A	84.0 M (83.6)	75.0 M	64.0 M (62.7)	60.0 M	50.0 M	30.00 M	15.00 M	10.00 M	7.50 M	5.00 M	4.00 M	2400 k (2182)	
	3000A	100.0 M (100.4)	90.0 M	80.0 M (75.3)	72.0 M	60.0 M	36.00 M	18.00 M	12.00 M	9.00 M	6.00 M	4.80 M	2800 k (2618)	
	4000A	140.0 M (133.8)	120.0 M	100.0 M (100.4)	96.0 M	80.0 M	48.0 M	24.00 M	16.00 M	12.00 M	8.00 M	6.40 M	3600 k (3491)	
	5000A	180.0 M (167.3)	150.0 M	140.0 M (125.5)	120.0 M	100.0 M	60.0 M	30.00 M	20.00 M	15.00 M	10.00 M	8.00 M	4.50 M (4.36)	
	6000A	200.0 M (200.7)	180.0 M	160.0 M (150.5)	150.0 M (144.0)	120.0 M	72.0 M	36.00 M	24.00 M	18.00 M	12.00 M	9.60 M	5.60 M (5.24)	
	7500A	280.0 M (250.9)	240.0 M (225.0)	200.0 M (188.2)	180.0 M	150.0 M	90.0 M	45.0 M	30.00 M	24.00 M (22.50)	15.00 M	12.00 M	6.40 M (6.55)	
	8000A	280.0 M (267.6)	240.0 M	200.0 M (200.7)	200.0 M (192.0)	160.0 M	96.0 M	48.0 M	32.00 M	24.00 M	16.00 M	14.00 M (12.80)	7.20 M (6.98)	
	9000A	320.0 M (301.1)	280.0 M (270.0)	240.0 M (225.8)	240.0 M (216.0)	180.0 M	120.0 M (108.0)	56.0 M (54.0)	36.00 M	28.00 M (27.00)	18.00 M	15.00 M (14.40)	8.00 M (7.85)	
	10000A	360.0 M (334.5)	300.0 M	280.0 M (250.9)	240.0 M	200.0 M	120.0 M	60.0 M	40.0 M	30.00 M	20.00 M	16.00 M	8.40 M (8.73)	
	12000A	420 M (401)	360.0 M	320.0 M (301.1)	300.0 M (288.0)	240.0 M	150.0 M (144.0)	72.0 M	48.0 M	36.00 M	24.00 M	20.00 M (19.20)	10.00 M (10.47)	×100
	15000A	560 M (502)	450 M	400 M (376)	360.0 M	300.0 M	180.0 M	90.0 M	60.0 M	45.0 M	30.00 M	24.00 M	14.00 M (13.09)	
×10000	20000A	720 M (669)	600 M	560 M (502)	480 M	400 M	240.0 M	120.0 M	80.0 M	60.0 M	40.0 M	32.00 M	18.00 M (17.45)	
	30000A		900 M	800 M (753)	720 M	600 M	360.0 M	180.0 M	120.0 M	90.0 M	60.0 M	48.0 M	28.00 M (26.18)	×1000

<Note 1>

Parenthesis is primary active power (reactive power) value in /1kW(1kvar).
In the blank, setting is impossible.
About active power and reactive power range.
Full scale display, less than 4000 : 4 digit. More than 4000 : 3 digit.
An example) 4800kW → 4.80MW
40kvar → 40.0kvar
20kW → 20.00kW

<Note 2>

In case the voltage range and the current range were set as [ ] of an upper table and an output pulse unit (a four-step setup is possible) is set as the fastest.
The output pulse width of a pulse output is set to 100 to 130ms. (Usually 240 to 260ms)

Appendix table 1-3

Active power range, watt-hour multiplier rate table (3-phase 3-wire)

Multiplier rate	V range / A range	600V (VT460/110V) [W]	600V (VT440/110V) [W]	500V (VT380/110V) [W]	300V (VT220/110V) [W]	150V (110V) [W]	Multiplier rate
	5A	4.20 k (4.18)	4.00 k	3600 k (3455)	2000	1000	×0.01
	6A	5.60 k (5.02)	4.80 k	4.20 k (4.15)	2400	1200	
	7.5A	6.40 k (6.27)	6.00 k	5.60 k (5.18)	3000	1500	
	8A	7.20 k (6.69)	6.40 k	5.60 k (5.53)	3200	1600	
	10A	8.40 k (8.36)	8.00 k	7.20 k (6.91)	4.00 k	2000	
×0.1	12A	10.00 k (10.04)	9.60 k	8.40 k (8.29)	4.80 k	2400	
	15A	14.00 k (12.55)	12.00 k	10.00 k (10.36)	6.00 k	3000	
	20A	18.00 k (16.73)	16.00 k	14.00 k (13.82)	8.00 k	4.00 k	
	25A	24.00 k (20.91)	20.00 k	18.00 k (17.27)	10.00 k	5.00 k	
	30A	28.00 k (25.09)	24.00 k	20.00 k (20.73)	12.00 k	6.00 k	
	40A	36.00 k (33.45)	32.00 k	28.00 k (27.64)	16.00 k	8.00 k	
	50A	42.0 k (41.8)	40.0 k	36.00 k (34.55)	20.00 k	10.00 k	×0.1
	60A	56.0 k (50.2)	48.0 k	42.0 k (41.5)	24.00 k	12.00 k	
	75A	64.0 k (62.7)	60.0 k	56.0 k (51.8)	30.00 k	15.00 k	
	80A	72.0 k (66.9)	64.0 k	56.0 k (55.3)	32.00 k	16.00 k	
	100A	84.0 k (83.6)	80.0 k	72.0 k (69.1)	40.0 k	20.00 k	
×1	120A	100.0 k (100.4)	96.0 k	84.0 k (82.9)	48.0 k	24.00 k	
	150A	140.0 k (125.5)	120.0 k	100.0 k (103.6)	60.0 k	30.00 k	
	200A	180.0 k (167.3)	160.0 k	140.0 k (138.2)	80.0 k	40.0 k	
	250A	240.0 k (209.1)	200.0 k	180.0 k (172.7)	100.0 k	50.0 k	
	300A	280.0 k (250.9)	240.0 k	200.0 k (207.3)	120.0 k	60.0 k	
	400A	360.0 k (334.5)	320.0 k	280.0 k (276.4)	160.0 k	80.0 k	
	500A	420 k (418)	400 k	360.0 k (345.5)	200.0 k	100.0 k	×1
	600A	560 k (502)	480 k	420 k (415)	240.0 k	120.0 k	
	750A	640 k (627)	600 k	560 k (518)	300.0 k	150.0 k	
	800A	720 k (669)	640 k	560 k (553)	320.0 k	160.0 k	
	900A	800 k (753)	720 k	640 k (622)	360.0 k	180.0 k	
	1000A	840 k (836)	800 k	720 k (691)	400 k	200.0 k	
×10	1200A	1000 k (1004)	960 k	840 k (829)	480 k	240.0 k	
	1500A	1400 k (1255)	1200 k	1000 k (1036)	600 k	300.0 k	
	1600A	1400 k (1338)	1400 k (1280)	1200 k (1105)	640 k	320.0 k	
	1800A	1600 k (1505)	1500 k (1440)	1400 k (1244)	720 k	360.0 k	
	2000A	1800 k (1673)	1600 k	1400 k (1382)	800 k	400 k	
	2500A	2400 k (2091)	2000 k	1800 k (1727)	1000 k	500 k	
	3000A	2800 k (2509)	2400 k	2000 k (2073)	1200 k	600 k	
	4000A	3600 k (3345)	3200 k	2800 k (2764)	1600 k	800 k	
	5000A	4.20 M (4.18)	4.00 M	3600 k (3455)	2000 k	1000 k	×10
	6000A	5.60 M (5.02)	4.80 M	4.20 M (4.15)	2400 k	1200 k	
	7500A	6.40 M (6.27)	6.00 M	5.60 M (5.18)	3000 k	1500 k	
	8000A	7.20 M (6.69)	6.40 M	5.60 M (5.53)	3200 k	1600 k	
	9000A	8.00 M (7.53)	7.20 M	6.40 M (6.22)	3600 k	1800 k	
	10000A	8.40 M (8.36)	8.00 M	7.20 M (6.91)	4.00 M	2000 k	
×100	12000A	10.00 M (10.04)	9.60 M	8.40 M (8.29)	4.80 M	2400 k	
	15000A	14.00 M (12.55)	12.00 M	10.00 M (10.36)	6.00 M	3000 k	
	20000A	18.00 M (16.73)	16.00 M	14.00 M (13.82)	8.00 M	4.00 M	
×1000	30000A	28.00 M (25.09)	24.00 M	20.00 M (20.73)	12.00 M	6.00 M	×100

〈Note 1〉

Parenthesis is primary active power (reactive power) value in /1kW(1kvar).
In the blank, setting is impossible.
About active power and reactive power range.
Full scale display, less than 4000 : 4 digit. More than 4000 : 3 digit.
An example) 4800kW → 4.80MW
40kvar → 40.0kvar
20kW → 20.00kW

〈Note 2〉

In case the voltage range and the current range were set as ▭ of an upper table and an output pulse unit (a four-step setup is possible) is set as the fastest.
The output pulse width of a pulse output is set to 100 to 130ms. (Usually 240 to 260ms)

Appendix table 2
Active power range, watt-hour multiplier rate table (Single-phase 3-wire)

V range / A range	150V (110V) [W]	Multiplier rate
5A	1000	
6A	1200	
7.5A	1500	
8A	1600	
10A	2000	
12A	2400	
15A	3000	
20A	4.00 k	
25A	5.00 k	
30A	6.00 k	
40A	8.00 k	×0.1
50A	10.00 k	
60A	12.00 k	
75A	15.00 k	
80A	16.00 k	
100A	20.00 k	
120A	24.00 k	
150A	30.00 k	
200A	40.0 k	
250A	50.0 k	
300A	60.0 k	
400A	80.0 k	×1
500A	100.0 k	
600A	120.0 k	
750A	150.0 k	
800A	160.0 k	
900A	180.0 k	
1000A	200.0 k	
1200A	240.0 k	
1500A	300.0 k	
1600A	320.0 k	
1800A	360.0 k	
2000A	400 k	
2500A	500 k	
3000A	600 k	
4000A	800 k	×10
5000A	1000 k	
6000A	1200 k	
7500A	1500 k	
8000A	1600 k	
9000A	1800 k	
10000A	2000 k	
12000A	2400 k	
15000A	3000 k	
20000A	4.00 M	
30000A	6.00 M	×100

〈Note 1〉
Parenthesis is primary active power (reactive power) value in /1kW(1kvar).
In the blank, setting is impossible.
About active power and reactive power range.
Full scale display, less than 4000 : 4 digit. More than 4000 : 3 digit.
An example) 4800kW → 4.80MW
40kvar → 40.0kvar
20kW → 20.00kW

〈Note 2〉
In case the voltage range and the current range were set as [ ] of an upper table and an output pulse unit (a four-step setup is possible) is set as the fastest.
The output pulse width of a pulse output is set to 100 to 130ms. (Usually 240 to 260ms)

Appendix table 3-1

Active power range, watt-hour multiplier rate table (Single-phase 2-wire)

Multiplier rate	V range / A range	750.0kV (VT550000/110V) [W]	500.0kV (VT380000/110V) [W]	375.0kV (VT275000/110V) [W]	300.0kV (VT220000/110V) [W]	255.0kV (VT187000/110V) [W]	210.0kV (VT154000/110V) [W]	180.0kV (VT132000/110V) [W]	150.0kV (VT110000/110V) [W]	105.0kV (VT77000/110V) [W]	90.0kV (VT66000/110V) [W]	45.0kV (VT33000/110V) [W]	30.0kV (VT22000/110V) [W]	Multiplier rate
	5A	2500 k	1800 k (1727)	1400 k (1250)	1000 k	900 k (850)	720 k (700)	600 k	500 k	360.0 k (350.0)	300.0 k	150.0 k	100.0 k	
	6A	3000 k	2000 k (2073)	1500 k	1200 k	1000 k (1020)	840 k	720 k	600 k	420 k	360.0 k	180.0 k	120.0 k	
	7.5A	4.00 M (3.75)	2800 k (2591)	2000 k (1875)	1500 k	1400 k (1275)	1200 k (1050)	900 k	750 k	560 k (525)	450 k	240.0 k (225.0)	150.0 k	
	8A	4.00 M	2800 k (2764)	2000 k	1600 k	1400 k (1360)	1200 k (1120)	960 k	800 k	560 k	480 k	240.0 k	160.0 k	
	10A	5.00 M	3600 k (3455)	2500 k	2000 k	1800 k (1700)	1400 k	1200 k	1000 k	720 k (700)	600 k	300.0 k	200.0 k	
	12A	6.00 M	4.20 M (4.15)	3000 k	2400 k	2000 k (2040)	1800 k (1680)	1500 k (1440)	1200 k	840 k	720 k	360.0 k	240.0 k	
×100	15A	7.50 M	5.60 M (5.18)	4.00 M (3.75)	3000 k	2800 k (2550)	2400 k (2100)	1800 k	1500 k	1200 k (1050)	900 k	450 k	300.0 k	
	20A	10.00 M	7.20 M (6.91)	5.00 M	4.00 M	3600 k (3400)	2800 k	2400 k	2000 k	1400 k	1200 k	600 k	400 k	
	25A	14.00 M (12.50)	9.00 M (8.64)	6.40 M (6.25)	5.00 M	4.50 M (4.25)	3600 k (3500)	3000 k	2500 k	1800 k (1750)	1500 k	750 k	500 k	
	30A	15.00 M	10.00 M (10.36)	7.50 M	6.00 M	5.60 M (5.10)	4.20 M	3600 k	3000 k	2400 k (2100)	1800 k	900 k	600 k	
	40A	20.00 M	14.00 M (13.82)	10.00 M	8.00 M	7.20 M (6.80)	5.60 M	4.80 M	4.00 M	2800 k	2400 k	1200 k	800 k	×10
	50A	25.00 M	18.00 M (17.27)	14.00 M (12.50)	10.00 M	9.00 M (8.50)	7.20 M (7.00)	6.00 M	5.00 M	3600 k (3500)	3000 k	1500 k	1000 k	
	60A	30.00 M	20.00 M (20.73)	15.00 M	12.00 M	10.00 M (10.20)	8.40 M	7.20 M	6.00 M	4.20 M	3600 k	1800 k	1200 k	
	75A	40.0 M (37.5)	28.00 M (25.91)	20.00 M (18.75)	15.00 M	14.00 M (12.75)	12.00 M (10.50)	9.00 M	7.50 M	5.60 M (5.25)	4.50 M	2400 k (2250)	1500 k	
	80A	40.0 M	28.00 M (27.64)	20.00 M	16.00 M	14.00 M (13.60)	12.00 M (11.20)	9.60 M	8.00 M	5.60 M	4.80 M	2400 k	1600 k	
	100A	50.0 M	36.00 M (34.55)	25.00 M	20.00 M	18.00 M (17.00)	14.00 M	12.00 M	10.00 M	7.20 M (7.00)	6.00 M	3000 k	2000 k	
	120A	60.0 M	42.0 M (41.5)	30.00 M	24.00 M	20.00 M (20.40)	18.00 M (16.80)	15.00 M (14.40)	12.00 M	8.40 M	7.20 M	3600 k	2400 k	
×1000	150A	75.0 M	56.0 M (51.8)	40.0 M (37.50)	30.00 M	28.00 M (25.50)	24.00 M (21.00)	18.00 M	15.00 M	12.00 M (10.50)	9.00 M	4.50 M	3000 k	
	200A	100.0 M	72.0 M (69.1)	50.0 M	40.0 M	36.00 M (34.00)	28.00 M	24.00 M	20.00 M	14.00 M	12.00 M	6.00 M	4.00 M	
	250A	140.0 M (125.0)	90.0 M (86.4)	64.0 M (62.5)	50.0 M	45.0 M (42.5)	36.00 M (35.00)	30.00 M	25.00 M	18.00 M (17.50)	15.00 M	7.50 M	5.00 M	
	300A	150.0 M	100.0 M (103.6)	75.0 M	60.0 M	56.0 M (51.0)	42.0 M	36.00 M	30.00 M	24.00 M (21.00)	18.00 M	9.00 M	6.00 M	
	400A	200.0 M	140.0 M (138.2)	100.0 M	80.0 M	72.0 M (68.0)	56.0 M	48.0 M	40.0 M	28.00 M	24.00 M	12.00 M	8.00 M	×100
	500A	250.0 M	180.0 M (172.7)	140.0 M (125.0)	100.0 M	90.0 M (85.0)	72.0 M (70.0)	60.0 M	50.0 M	36.00 M (35.00)	30.00 M	15.00 M	10.00 M	
	600A	300.0 M	200.0 M (207.3)	150.0 M	120.0 M	100.0 M (102.0)	84.0 M	72.0 M	60.0 M	42.0 M	36.00 M	18.00 M	12.00 M	
	750A	400 M (375)	280.0 M (259.1)	200.0 M (187.5)	150.0 M	140.0 M (127.5)	120.0 M (105.0)	90.0 M	75.0 M	56.0 M (52.5)	45.0 M	24.00 M (22.50)	15.00 M	
	800A	400 M	280.0 M (276.4)	200.0 M	160.0 M	140.0 M (136.0)	120.0 M (112.0)	96.0 M	80.0 M	56.0 M	48.0 M	24.00 M	16.00 M	
	900A	450 M	320.0 M (310.9)	240.0 M (225.0)	180.0 M	160.0 M (153.0)	140.0 M (126.0)	120.0 M (108.0)	90.0 M	64.0 M (63.0)	56.0 M (54.0)	28.00 M (27.00)	18.00 M	
	1000A	500 M	360.0 M (345.5)	250.0 M	200.0 M	180.0 M (170.0)	140.0 M	120.0 M	100.0 M	72.0 M (70.0)	60.0 M	30.00 M	20.00 M	
	1200A	600 M	420 M (415)	300.0 M	240.0 M	200.0 M (204.0)	180.0 M (168.0)	150.0 M (144.0)	120.0 M	84.0 M	72.0 M	36.00 M	24.00 M	
	1500A	750 M	560 M (518)	400 M (375)	300.0 M	280.0 M (255.0)	240.0 M (210.0)	180.0 M	150.0 M	120.0 M (105.0)	90.0 M	45.0 M	30.00 M	
	1600A	800 M	560 M (553)	400 M	320.0 M	280.0 M (272.0)	240.0 M (224.0)	200.0 M (192.0)	160.0 M	120.0 M (112.0)	96.0 M	48.0 M	32.00 M	
×10000	1800A	900 M	640 M (622)	450 M	360.0 M	320.0 M (306.0)	280.0 M (252.0)	240.0 M (216.0)	180.0 M	140.0 M (126.0)	120.0 M (108.0)	56.0 M (54.0)	36.00 M	
	2000A		720 M (691)	500 M	400 M	360.0 M (340.0)	280.0 M	240.0 M	200.0 M	140.0 M	120.0 M	60.0 M	40.0 M	
	2500A		900 M (864)	640 M (625)	500 M	450 M (425)	360.0 M (350.0)	300.0 M	250.0 M	180.0 M (175.0)	150.0 M	75.0 M	50.0 M	
	3000A			750 M	600 M	560 M (510)	420 M	360.0 M	300.0 M	240.0 M (210.0)	180.0 M	90.0 M	60.0 M	
	4000A				800 M	720 M (680)	560 M	480 M	400 M	280.0 M	240.0 M	120.0 M	80.0 M	×1000
	5000A					900 M (850)	720 M (700)	600 M	500 M	360.0 M (350.0)	300.0 M	150.0 M	100.0 M	
	6000A						840 M	720 M	600 M	420 M	360.0 M	180.0 M	120.0 M	
	7500A							900 M	750 M	560 M (525)	450 M	240.0 M (225.0)	150.0 M	
	8000A								800 M	560 M	480 M	240.0 M	160.0 M	
	9000A									640 M (630)	560 M (540)	280.0 M (270.0)	180.0 M	
	10000A									720 M (700)	600 M	300.0 M	200.0 M	
	12000A									840 M	720 M	360.0 M	240.0 M	
	15000A										900 M	450 M	300.0 M	
	20000A											600 M	400 M	
	30000A											900 M	600 M	×10000

<Note 1>

Parenthesis is primary active power (reactive power) value in /500W(500var).
In the blank, setting is impossible.
About active power and reactive power range.
Full scale display, less than 4000 : 4 digit. More than 4000 : 3 digit.
An example) 4800kW → 4.80MW
40kvar → 40.0kvar
20kW → 20.00kW

<Note 2>

In case the voltage range and the current range were set as [ ] of an upper table and an output pulse unit (a four-step setup is possible) is set as the fastest.
The output pulse width of a pulse output is set to 100 to 130ms. (Usually 240 to 260ms)

Appendix table 3-2

Active power range, watt-hour multiplier rate table (Single-phase 2-wire)

Multiplier rate	V range / A range	25.00kV (VT18400/110V) [W]	24.00kV (VT16500/110V) [W]	18.00kV (VT13800/110V) [W]	18.00kV (VT13200/110V) [W]	15.00kV (VT11000/110V) [W]	9000V (VT6600/110V) [W]	4500V (VT3300/110V) [W]	3000V (VT2200/110V) [W]	2400V (VT1650/110V) [W]	1500V (VT1100/110V) [W]	1200V (VT880/110V) [W]	600V (VT480/110V) [W]	Multiplier rate
×1	5A	84.0 k (83.6)	75.0 k	64.0 k (62.7)	60.0 k	50.0 k	30.00 k	15.00 k	10.00 k	7.50 k	5.00 k	4.00 k	2400 (2182)	
	6A	100.0 k (100.4)	90.0 k	80.0 k (75.3)	72.0 k	60.0 k	36.00 k	18.00 k	12.00 k	9.00 k	6.00 k	4.80 k	2800 (2618)	
	7.5A	140.0 k (125.5)	120.0 k (112.5)	96.0 k (94.1)	90.0 k	75.0 k	45.0 k	24.00 k (22.50)	15.00 k	12.00 k (11.25)	7.50 k	6.00 k	3600 (3273)	
	8A	140.0 k (133.8)	120.0 k	100.0 k (100.4)	96.0 k	80.0 k	48.0 k	24.00 k	16.00 k	12.00 k	8.00 k	6.40 k	3600 (3491)	
	10A	180.0 k (167.3)	150.0 k	140.0 k (125.5)	120.0 k	100.0 k	60.0 k	30.00 k	20.00 k	15.00 k	10.00 k	8.00 k	4.50 k (4.36)	
	12A	200.0 k (200.7)	180.0 k	160.0 k (150.5)	150.0 k (144.0) k	120.0 k	72.0 k	36.00 k	24.00 k	18.00 k	12.00 k	9.60 k	5.60 k (5.24)	
	15A	280.0 k (250.9)	240.0 k (225.0)	200.0 k (188.2)	180.0 k	150.0 k	90.0 k	45.0 k	30.00 k	24.00 k (22.50)	15.00 k	12.00 k	7.20 k (6.55)	
	20A	360.0 k (334.5)	300.0 k	280.0 k (250.9)	240.0 k	200.0 k	120.0 k	60.0 k	40.0 k	30.00 k	20.00 k	16.00 k	9.00 k (8.73)	×0.1
	25A	420 k (418)	400 k (375.0)	320.0 k (313.6)	300.0 k	250.0 k	150.0 k	75.0 k	50.0 k	40.0 k (37.5)	25.00 k	20.00 k	12.00 k (10.91)	
	30A	560 k (502)	450 k	400 k (376.4)	360.0 k	300.0 k	180.0 k	90.0 k	60.0 k	45.0 k	30.00 k	24.00 k	14.00 k (13.09)	
×10	40A	720 k (669)	600 k	560 k (502)	480 k	400 k	240.0 k	120.0 k	80.0 k	60.0 k	40.0 k	32.00 k	18.00 k (17.45)	
	50A	840 k (836)	750 k	640 k (627)	600 k	500 k	300.0 k	150.0 k	100.0 k	75.0 k	50.0 k	40.0 k	24.00 k (21.82)	
	60A	1000 k (1004)	900 k	800 k (753)	720 k	600 k	360.0 k	180.0 k	120.0 k	90.0 k	60.0 k	48.0 k	28.00 k (26.18)	
	75A	1400 k (1255)	1200 k (1125)	960 k (941)	900 k	750 k	450 k	240.0 k (225.0)	150.0 k	120.0 k (112.5)	75.0 k	60.0 k	36.00 k (32.73)	
	80A	1400 k (1338)	1200 k	1000 k (1004)	960 k	800 k	480 k	240.0 k	160.0 k	120.0 k	80.0 k	64.0 k	36.00 k (34.91)	
	100A	1800 k (1673)	1500 k	1400 k (1255)	1200 k	1000 k	600 k	300.0 k	200.0 k	150.0 k	100.0 k	80.0 k	45.0 k (43.6)	
	120A	2000 k (2007)	1800 k	1600 k (1505)	1500 k (1440)	1200 k	720 k	360.0 k	240.0 k	180.0 k	120.0 k	96.0 k	56.0 k (52.4)	
	150A	2800 k (2509)	2400 k (2250)	2000 k (1882)	1800 k	1500 k	900 k	450 k	300.0 k	240.0 k (225.0)	150.0 k	120.0 k	72.0 k (65.5)	
	200A	3600 k (3345)	3000 k	2800 k (2509)	2400 k	2000 k	1200 k	600 k	400 k	300.0 k	200.0 k	160.0 k	9.00 k (87.3)	×1
	250A	4.20 M (4.18)	4.00 M (3.75)	3200 k (3136)	3000 k	2500 k	1500 k	750 k	500 k	400 k (375.0)	250.0 k	200.0 k	120.0 k (109.1)	
	300A	5.60 M (5.02)	4.50 M	4.00 M (3.76)	3600 k	3000 k	1800 k	900 k	600 k	450 k	300.0 k	240.0 k	140.0 k (130.9)	
×100	400A	7.20 M (6.69)	6.00 M	5.60 M (5.02)	4.80 M	4.00 M	2400 k	1200 k	800 k	600 k	400 k	320.0 k	180.0 k (174.5)	
	500A	8.40 M (8.36)	7.50 M	6.40 M (6.27)	6.00 M	5.00 M	3000 k	1500 k	1000 k	750 k	500 k	400 k	240.0 k (218.2)	
	600A	10.00 M (10.04)	9.00 M	8.00 M (7.53)	7.20 M	6.00 M	3600 k	1800 k	1200 k	900 k	600 k	480 k	280.0 k (261.8)	
	750A	14.00 M (12.55)	12.00 M (11.25)	9.60 M (9.41)	9.00 M	7.50 M	4.50 M	2400 k (2250)	1500 k	1200 k (1125)	750 k	600 k	360.0 k (327.3)	
	800A	14.00 M (13.38)	12.00 M	10.00 M (10.04)	9.60 M	8.00 M	4.80 M	2400 k	1600 k	1200 k	800 k	640 k	360.0 k (349.1)	
	900A	16.00 M (15.05)	14.00 M (13.50)	12.00 M (11.29)	12.00 M (10.80)	9.00 M	5.60 M (5.40)	2800 k (2700)	1800 k	1400 k (1350)	900 k	720 k	400 k (393)	
	1000A	18.00 M (16.73)	15.00 M	14.00 M (12.55)	12.00 M	10.00 M	6.00 M	3000 k	2000 k	1500 k	1000 k	800 k	450 k (436)	
	1200A	20.00 M (20.07)	18.00 M	16.00 M (15.05)	15.00 M (14.40)	12.00 M	7.20 M	3600 k	2400 k	1800 k	1200 k	960 k	560 k (524)	
	1500A	28.00 M (25.09)	24.00 M (22.50)	20.00 M (18.82)	18.00 M	15.00 M	9.00 M	4.50 M	3000 k	2400 k (2250)	1500 k	1200 k	720 k (655)	
	1600A	28.00 M (26.76)	24.00 M	24.00 M (20.07)	20.00 M (19.20)	16.00 M	9.60 M	4.80 M	3200 k	2400 k	1600 k	1400 k (1280)	720 k (698)	
	1800A	32.00 M (30.11)	28.00 M (27.00)	24.00 M (22.58)	24.00 M (21.60)	18.00 M	12.00 M (10.80)	5.60 M (5.40)	3600 k	2800 k (2700)	1800 k	1500 k (1440)	800 k (785)	
	2000A	36.00 M (33.45)	30.00 M	28.00 M (25.09)	24.00 M	20.00 M	12.00 M	6.00 M	4.00 M	3000 k	2000 k	1600 k	900 k (873)	×10
	2500A	42.0 M (41.8)	40.0 M (37.5)	32.00 M (31.36)	30.00 M	25.00 M	15.00 M	7.50 M	5.00 M	4.00 M (3.75)	2500 k	2000 k	1200 k (1091)	
	3000A	56.0 M (50.2)	45.0 M	40.0 M (37.64)	36.00 M	30.00 M	18.00 M	9.00 M	6.00 M	4.50 M	3000 k	2400 k	1400 k (1309)	
×1000	4000A	72.0 M (66.9)	60.0 M	56.0 M (50.2)	48.0 M	40.0 M	24.00 M	12.00 M	8.00 M	6.00 M	4.00 M	3200 k	1800 k (1745)	
	5000A	84.0 M (83.6)	75.0 M	64.0 M (62.7)	60.0 M	50.0 M	30.00 M	15.00 M	10.00 M	7.50 M	5.00 M	4.00 M	2400 k (2182)	
	6000A	100.0 M (100.4)	90.0 M	80.0 M (75.3)	72.0 M	60.0 M	36.00 M	18.00 M	12.00 M	9.00 M	6.00 M	4.80 M	2800 k (2618)	
	7500A	140.0 M (125.5)	120.0 M (112.5)	96.0 M (94.1)	90.0 M	75.0 M	45.0 M	24.00 M (22.50)	15.00 M	12.00 M (11.25)	7.50 M	6.00 M	3600 k (3273)	
	8000A	140.0 M (133.8)	120.0 M	100.0 M (100.4)	96.0 M	80.0 M	48.0 M	24.00 M	16.00 M	12.00 M	8.00 M	6.40 M	3600 k (3491)	
	9000A	160.0 M (150.5)	140.0 M (135.0)	120.0 M (112.9)	120.0 M (108.0)	90.0 M	56.0 M (54.0)	28.00 M (27.00)	18.00 M	14.00 M (13.50)	9.00 M	7.20 M	4.00 M (3.93)	
	10000A	180.0 M (167.3)	150.0 M	140.0 M (125.5)	120.0 M	100.0 M	60.0 M	30.00 M	20.00 M	15.00 M	10.00 M	8.00 M	4.50 M (4.36)	
	12000A	200.0 M (200.7)	180.0 M	160.0 M (150.5)	150.0 M (144.0)	120.0 M	72.0 M	36.00 M	24.00 M	18.00 M	12.00 M	9.60 M	5.60 M (5.24)	
	15000A	280.0 M (250.9)	240.0 M (225.0)	200.0 M (188.2)	180.0 M	150.0 M	90.0 M	45.0 M	30.00 M	24.00 M (22.50)	15.00 M	12.00 M	7.20 M (6.55)	
	20000A	360.0 M (334.5)	300.0 M	280.0 M (250.9)	240.0 M	200.0 M	120.0 M	60.0 M	40.0 M	30.00 M	20.00 M	16.00 M	9.00 M (8.73)	×100
×10000	30000A	560 M (502)	450 M	400 M (376)	360.0 M	300.0 M	180.0 M	90.0 M	60.0 M	45.0 M	30.00 M	24.00 M	14.00 M (13.09)	×1000

<Note 1>

Parenthesis is primary active power (reactive power) value in /500W(500var).
In the blank, setting is impossible.
About active power and reactive power range.
Full scale display, less than 4000 : 4 digit. More than 4000 : 3 digit.
An example) 4800kW → 4.80MW
40kvar → 40.0kvar
20kW → 20.00kW

<Note 2>

In case the voltage range and the current range were set as [ ] of an upper table and an output pulse unit (a four-step setup is possible) is set as the fastest.
The output pulse width of a pulse output is set to 100 to 130ms. (Usually 240 to 260ms)

Appendix table 3-3

Active power range, watt-hour multiplier rate table (Single-phase 2-wire)

Multiplier rate	V range / A range	600V (VT460/110V) [W]	600V (VT440/110V) [W]	500V (VT380/110V) [W]	300V (VT220/110V) [W]	150V (110V) [W]	Multiplier rate
	5A	2400 (2091)	2000	1800 (1727)	1000	500	
	6A	2800 (2509)	2400	2000 (2073)	1200	600	
	7.5A	3200 (3136)	3000	2800 (2591)	1500	750	
	8A	3600 (3345)	3200	2800 (2764)	1600	800	×0.01
	10A	4.20 k (4.18)	4.00 k	3600 (3455)	2000	1000	
	12A	5.60 k (5.02)	4.80 k	4.20 k (4.15)	2400	1200	
	15A	6.40 k (6.27)	6.00 k	5.60 k (5.18)	3000	1500	
×0.1	20A	8.40 k (8.36)	8.00 k	7.20 k (6.91)	4.00 k	2000	
	25A	12.00 k (10.45)	10.00 k	9.00 k (8.64)	5.00 k	2500	
	30A	14.00 k (12.55)	12.00 k	10.00 k (10.36)	6.00 k	3000	
	40A	18.00 k (16.73)	16.00 k	14.00 k (13.82)	8.00 k	4.00 k	
	50A	24.00 k (20.91)	20.00 k	18.00 k (17.27)	10.00 k	5.00 k	
	60A	28.00 k (25.09)	24.00 k	20.00 k (20.73)	12.00 k	6.00 k	
	75A	32.00 k (31.36)	30.00 k	28.00 k (25.91)	15.00 k	7.50 k	
	80A	36.00 k (33.45)	32.00 k	28.00 k (27.64)	16.00 k	8.00 k	×0.1
	100A	42.0 k (41.8)	40.0 k	36.00 k (34.55)	20.00 k	10.00 k	
	120A	56.0 k (50.2)	48.0 k	42.0 k (41.5)	24.00 k	12.00 k	
	150A	64.0 k (62.7)	60.0 k	56.0 k (51.8)	30.00 k	15.00 k	
×1	200A	84.0 k (83.6)	80.0 k	72.0 k (69.1)	40.0 k	20.00 k	
	250A	120.0 k (104.5)	100.0 k	90.0 k (86.4)	50.0 k	25.00 k	
	300A	140.0 k (125.5)	120.0 k	100.0 k (103.6)	60.0 k	30.00 k	
	400A	180.0 k (167.3)	160.0 k	140.0 k (138.2)	80.0 k	40.0 k	
	500A	240.0 k (209.1)	200.0 k	180.0 k (172.7)	100.0 k	50.0 k	
	600A	280.0 k (250.9)	240.0 k	200.0 k (207.3)	120.0 k	60.0 k	
	750A	320.0 k (313.6)	300.0 k	280.0 k (259.1)	150.0 k	75.0 k	
	800A	360.0 k (334.5)	320.0 k	280.0 k (276.4)	160.0 k	80.0 k	
	900A	400 k (376.4)	360.0 k	320.0 k (310.9)	180.0 k	90.0 k	×1
	1000A	420 k (418)	400 k	360.0 k (345.5)	200.0 k	100.0 k	
	1200A	560 k (502)	480 k	420 k (415)	240.0 k	120.0 k	
	1500A	640 k (627)	600 k	560 k (518)	300.0 k	150.0 k	
	1600A	720 k (669)	640 k	560 k (553)	320.0 k	160.0 k	
	1800A	800 k (753)	720 k	640 k (622)	360.0 k	180.0 k	
×10	2000A	840 k (836)	800 k	720 k (691)	400 k	200.0 k	
	2500A	1200 k (1045)	1000 k	900 k (864)	500 k	250.0 k	
	3000A	1400 k (1255)	1200 k	1000 k (1036)	600 k	300.0 k	
	4000A	1800 k (1673)	1600 k	1400 k (1382)	800 k	400 k	
	5000A	2400 k (2091)	2000 k	1800 k (1727)	1000 k	500 k	
	6000A	2800 k (2509)	2400 k	2000 k (2073)	1200 k	600 k	
	7500A	3200 k (3136)	3000 k	2800 k (2591)	1500 k	750 k	
	8000A	3600 k (3345)	3200 k	2800 k (2764)	1600 k	800 k	
	9000A	4.00 M (3764)	3600 k	3200 k (3109)	1800 k	900 k	×10
	10000A	4.20 M (4.18)	4.00 M	3600 k (3455)	2000 k	1000 k	
	12000A	5.60 M (5.02)	4.80 M	4.20 M (4.15)	2400 k	1200 k	
	15000A	6.40 M (6.27)	6.00 M	5.60 M (5.18)	3000 k	1500 k	
×100	20000A	8.40 M (8.36)	8.00 M	7.20 M (6.91)	4.00 M	2000 k	
×1000	30000A	14.00 M (12.55)	12.00 M	10.00 M (10.36)	6.00 M	3000 k	×100

〈Note 1〉

Parenthesis is primary active power (reactive power) value in /500W(500var).
In the blank, setting is impossible.
About active power and reactive power range.
Full scale display, less than 4000 : 4 digit. More than 4000 : 3 digit.
An example) 4800kW → 4.80MW
40kvar → 40.0kvar
20kW → 20.00kW

〈Note 2〉

In case the voltage range and the current range were set as ▭ of an upper table and an output pulse unit (a four-step setup is possible) is set as the fastest.
The output pulse width of a pulse output is set to 100 to 130ms. (Usually 240 to 260ms)

DAIICHI ELECTRONICS CO., LTD.

Tokyo Office : 11-13, Hitotsuya 1-chome, Adachi-ku, Tokyo, 121-8639, JAPAN.
TEL : +81-3-3885-2411 , Fax : +81-3-3858-3966

Kyoto Office : 1-19, Ichinobe-Nishikawahara, Jyoyou-shi, Kyoto, 610-0114, JAPAN.
TEL : +81-774-55-1391 , Fax : +81-774-54-1353

Revision A, DATE : November 7, 2015