INSTRUCTION MANUAL
(DETAILED VERSION)

REVERSE POWER PROTECTION DEVICE

DRPR-72

DAIICHI ELECTRONICS CO., LTD.

Contents

Introduction ····· 2
Safety precaution ····· 2

1. Product outline
  1.1 Features of product ····· 4
  1.2 Dimensions and part names ····· 4
  1.3 Bundled items ····· 4

2. Outline dimension
  2.1 DRPR-72 ····· 5
  2.2 Current sensor (Option) ····· 5

3. Installation method ····· 6

4. Connection
  4.1 Circuits over 200A, high voltage circuits ····· 9
  4.2 Low voltage circuit 200A ····· 9

5. Operation and display ····· 10

6. Display mode
  6.1 Measurement display ····· 11
  6.2 Instant measurement display mode ····· 12
  6.3 Maximum value / Minimum value display mode ····· 13
  6.4 Reset ····· 13
  6.5 Setting value display mode ····· 14

7. Protection functions
  7.1 Protection detection block diagram ····· 15
  7.2 Protection detection ····· 16
  7.3 Protection detection history ····· 19

8. Setting
  8.1 Setting mode 1 ····· 20
  8.2 Setting mode 2 ····· 24

9. Test mode ····· 27

10. Specifications ····· 30

11. Maintenance and Inspection
  11.1 Inspection ····· 37
  11.2 Maintenance ····· 37
  11.3 Test ····· 38
    11.3.1 Reverse power (67P) test ····· 38
    11.3.2 Under power (91L) test ····· 40

12. Troubleshooting ····· 41

Appendix 1 to 3

Introduction

Thank you for purchase of DAIICHI product.
Please read this instruction manual carefully before use.
Keep this manual for future reference.
Please contact with us in case this manual is lost or damaged.

Safety Precaution

■ Usage environment and conditions

Don't use this product in the following conditions.

- Locations beyond the ambient temperature range (-10 to +55 ℃) and humidity range (5 to 90 % RH).
- Locations with excessive corrosive gas (SO_2 / H_2S / etc.)
- Locations with excessive dust.
- Locations with excessive vibration or shocks.
- Locations with excessive exogenous noise.
- Altitude over 2000 m.

When measure the following inverter output directly, error will becomes large.
Cycle control, SCR phase angle control, PWM inverter.

■ Outdoor use conditions.

- These products are not a dustproof, waterproof, and splash proof construction.
  Please avoid the place with much dust. Please do not install in the place directly exposed to the rain and water droplets. (IP code：IP40)
- Please do not install in the place directly exposed to the sun even through the glass.
  Discoloration and degradation of a name plate, and deformation of the box by the surface temperature rise may cause.
- Product life may shorten when the daily average temperature exceeds 40 ℃.

■ Mounting and wiring

Please refer to this instruction manual for installation and the wiring.

CAUTION	● Please refer to connection diagram for the wiring. ● Please avoid hot line work. ● Please use an electrical wire size suitable with the rated current. ● Please strip the insulation of the electric wire to the appropriate length. ● Please be careful not to short-circuit with adjacent poles due to wires protruding from the core wire. ● Please be sure to use this product in combination with the dedicated current sensor. Do not use the current sensor exceeding the input rating. ● Dedicated current sensors are for low-voltage circuits only and cannot be used for high-voltage circuits. Therefore, connecting to a high-voltage circuit may damage the device or cause a fire. When using in a high-voltage circuit, connect a 5A rated current sensor (CTF-5A) to the secondary of a 5A rated current transformer. ● Please use a penetrable insulated wire for the primary cable connecting the current sensor. Do not use non-insulated wires or conductors (such as busbars). ● If dust or rust adheres to the core split surface of the current sensor, the characteristics will deteriorate and an error will occur. Be careful not to get the core splitting surface dirty when installing. If it gets dirty, clean it with a dry cloth. ● Do not continuously energize the secondary of the current sensor in an open state. However, since it has a built-in protection circuit for secondary terminal opening, there is no problem with opening during wiring work. ● The current sensor has polarity, so be careful when connecting. ● The control output contact capacity is AC125V, 70mA, DC200V, 70mA. Please pay attention to the working voltage when using.

■ Preparation

This product must be set before use. Please read this manual and make the setting correctly.
If you make a mistake on the setting it does not operate correctly.

■ Maintenance and inspection

- Inspection during energization is dangerous.
- No replacement in periodic inspection.
- Please wipe off lightly with the dry soft cloth.
- Please do not use the organic solvent, chemicals, cleaners, etc., such as an alcohol, for cleaning.

■ Storage

When storing this product for a long period, please keep it in a place that satisfies the following environmental conditions.

- Within the range of ambient temperature (-20 to 70 ℃) and humidity (5 to 90 %RH).
- Place where average daily temperature does not exceed 40 ℃.
- Locations with little dust, corrosive gases, salt and oil smoke.
- A place not subject to vibration or shock.

■ Countermeasures against troubles

If this product breaks down within the warranty period, it will be repairs by DAIICHI Electronics.

■ Disposal

Please dispose of this product as industrial waste (noncombustible).
Mercury parts and a nickel-cadmium battery are not used for this product.

■ Warranty period

The warranty period of the product is one year after the date of delivery.

■ Warranty scope

During the warranty period, if a failure or defect due to our company's responsibility is found in our product, we will replace or repair the defective part free of charge.
However, if the failure or defect falls under any of the following items, our company will not be held responsible.

- If the handling is not described in the instruction manual or specifications.
- When the cause of the failure or defect is due to reasons other than the purchased product and the delivered product.
- If the cause is modification or repair that our company was not involved in after purchase or delivery.
- When it is caused by phenomena that cannot be foreseen by the science and technology that were put into practical use at the time of purchase or contract.
- Damage that could have been avoided if your company's equipment had functions, structures, etc. that are standard in the industry, when our products are incorporated into your equipment.
- When the product is used for purposes other than its intended use.
- External factors such as fire, abnormal voltage, etc., and natural disasters such as earthquakes, lightning, wind and flood damage.

In addition, we are not responsible for damages, secondary damages, damages to products other than our products, and compensation for other work caused by reasons that cannot be attributed to our company.

■ Considerations when designing a system

This product may malfunction or stop working due to accidental failure of internal parts.
Please consider system design considerations (duplication, installation of fail-safe circuits) according to the required reliability level of the system.

■ Replacement cycle of the product

We recommend updating the product for 10 years as a rough standard.

■ Change of instruction manual written contents.

This instruction manual changes written contents without a notice by product improvement etc.

1. Product outline

1.1 Features of product

- The reverse power relay and purchased power meter have been integrated.
- Can be installed without cutting cables and wires with current sensor input.
- High-speed response (measurement response 100 ms or less)
- Can be directly connected to 400V. (110V/220V/440V shared)
- Equipped with a wide viewing angle liquid crystal panel
- Wiring can be checked using the test function
- High reliability and reduced wiring man-hours due to screwless spring-type terminal block

1.2 Dimensions and part names

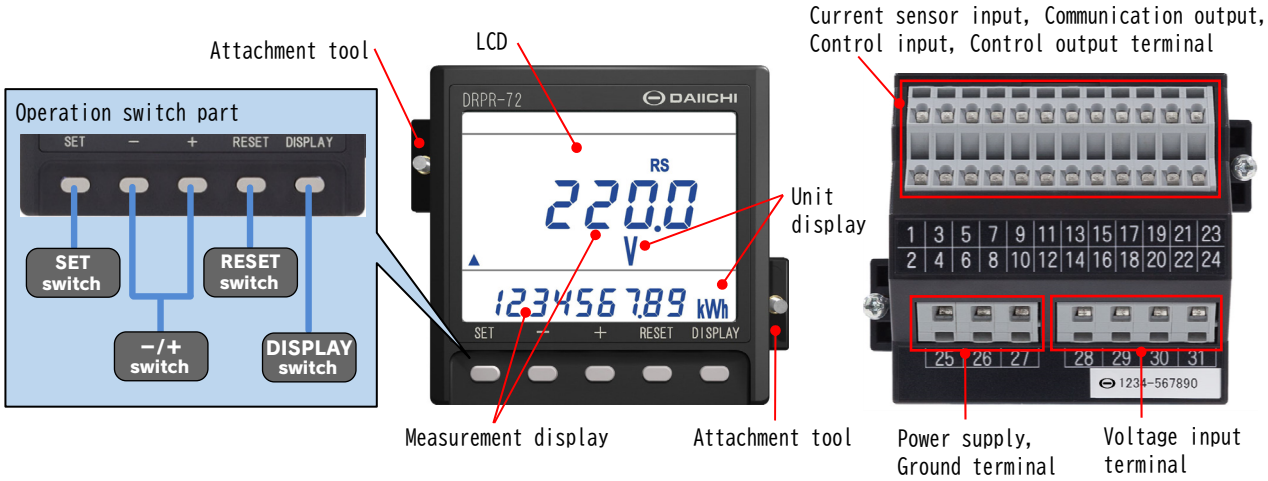

1.3 Bundled items

① Attachment tool ····· 2
② Termination resister for communication (100Ω) ····· 1

2. Outline dimension

2.1 DRPR-72

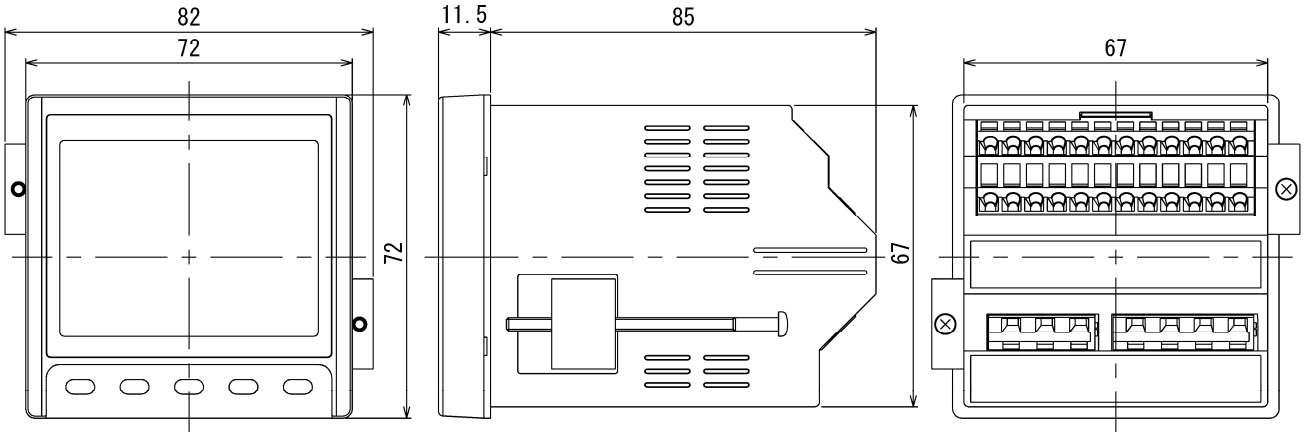

2.2 Current sensor (Option) ：Manufactured by MULTI MEASURING INSTRUMENTS Co., Ltd.

5A (CTF-5A)

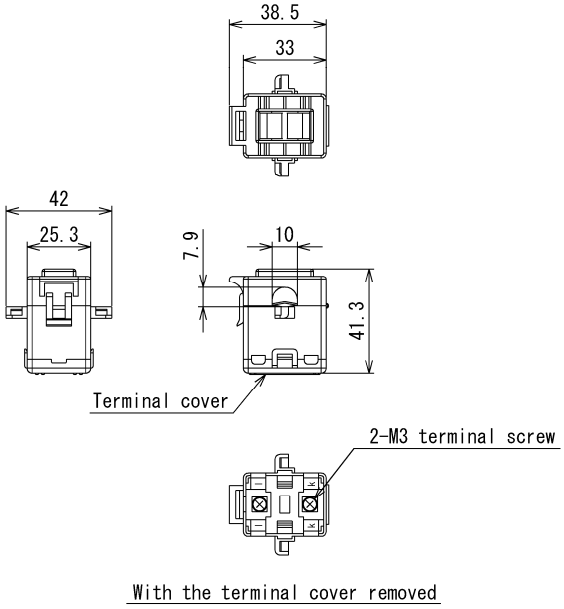

200A (CTF-200A)

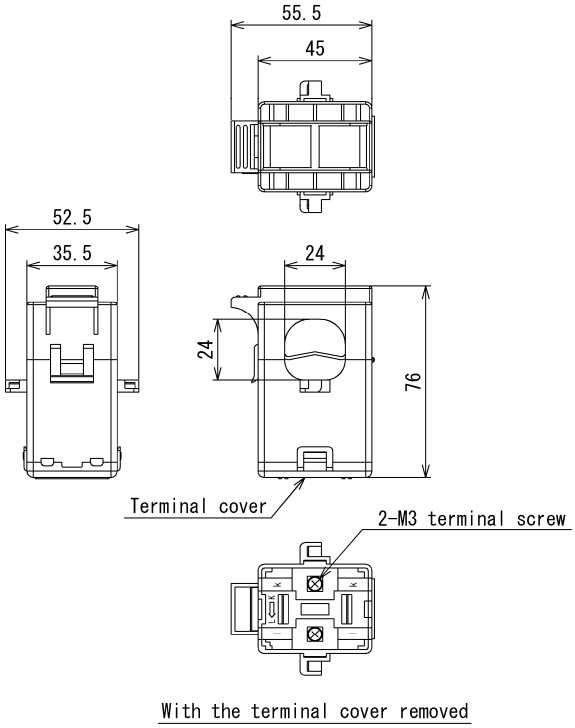

3. Installation method

■ Panel cutout dimensions

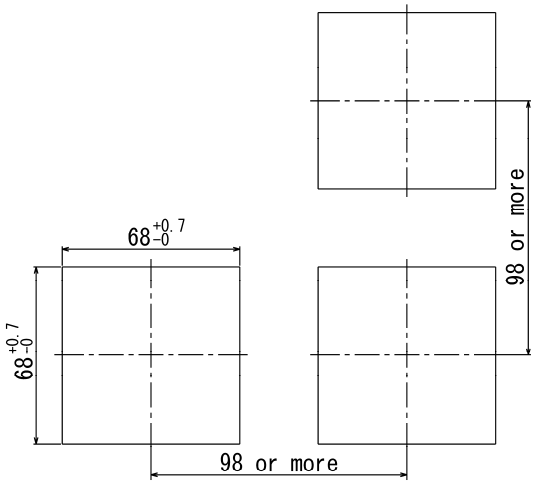

Panel cutout

■ Mounting position

Since the LCD contrast is changed in accordance with the monitoring angle, please be installed at the optimal angle.

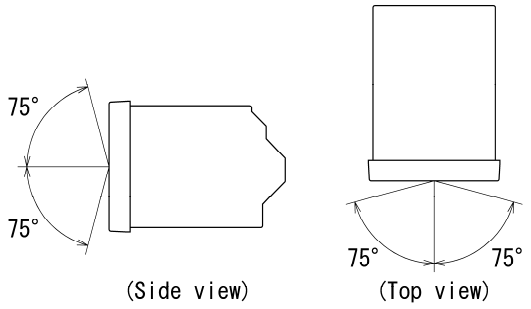

■ Installation

Insert from the front panel cut hole.
Install as shown in the figure below.

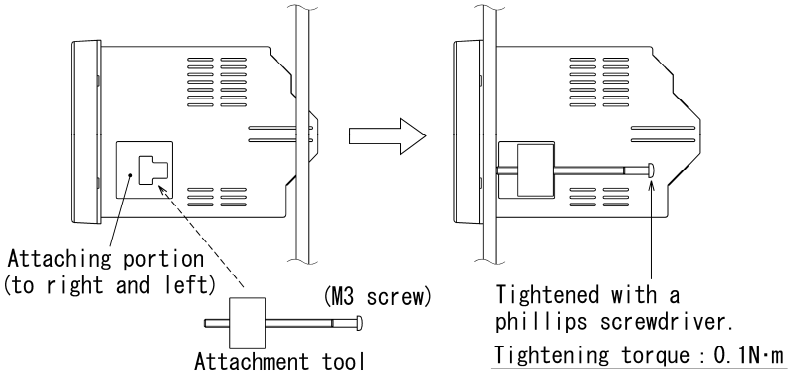

■ Connection of current sensor

① Remove the fixing hooks, and open the movable core.

② Please check the mounting direction of the current sensor. (Symbol : Power supply side K, Load side L)
Pass the wirees in the center of the current sensor.

③ Make sure that there is no dust on the core division surface.
Until the sound of the fixing hook is, please close the movable core.
To secure the current sensor to the wire in the cable ties.

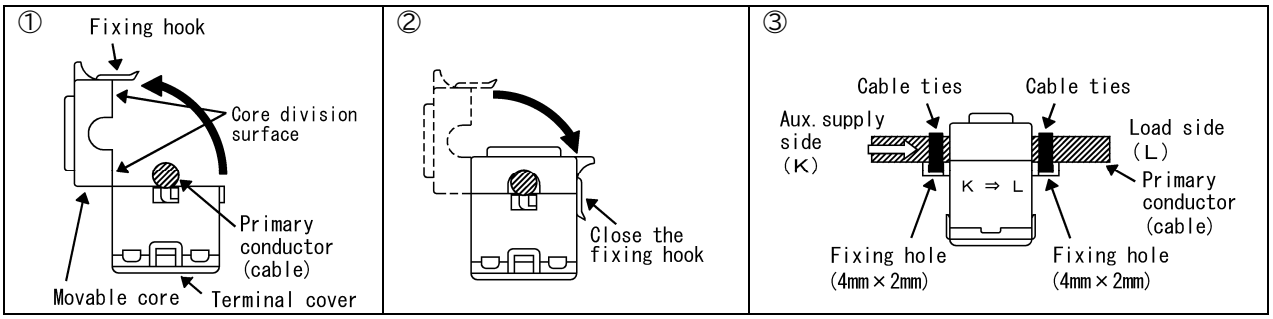

● Solderless terminal to be used in the secondary terminal of the current sensor, please use the Solderless terminal of the specified. Solderless terminal for M3 screw (Without insulation sleeve)
Tightening torque : 0.5 to 0.6N·m

● Current sensor window diameter, maximum wiring length

	Primary current	Type	CT inside diameter	Wiring length (Max.) (1)
Current sensor	5A	CTF-5A	10mm	10m/20m (2)
	200A	CTF-200A	24mm	50m

Note(1) Use cables of AWG20 (approx. 0.5mm²) or larger. Do not ground the secondary-side wiring (including shielded wires).

Note(2) The length of secondary-side wiring varies depending on the cable used.
AWG20 (approx. 0.5mm²) : Max. 10m, AWG18 (approx. 0.75mm²) or more : Max. 20m

■ Connection method

(1) Applicable wire

Terminal is a screw-less spring-type terminal. Fit wire size, please refer to the table below.

Terminal	Wire	Applicable wire					
		Single wire	Flexible stranded wire	Stranded wire, rod terminal (Ferrule with insulating collar)	Stranded wire, rod terminal (Ferrule without insulating collar)	Two stranded wire, rod terminal (Twin ferrule with insulating collar)	Delamination of wire
Voltage input, Power supply, Ground	Cross-sectional area	0.08 to 2.5 mm^2		0.25 to 1.5 mm^2		0.5 mm^2×2	5 to 6 mm
	AWG	28 to 12		24 to 16		22	
Current sensor, Communication output, Control input, Control output	Cross-sectional area	0.08 to 2.5 mm^2		0.25 to 1.5 mm^2		0.5 mm^2×2	
	AWG	28 to 12		24 to 16		22	

Flexible stranded wire

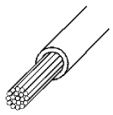

Single wire

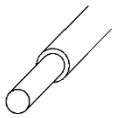

Stranded wire, rod terminal (Ferrule with insulating collar)

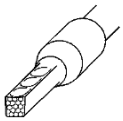

Stranded wire, rod terminal (Ferrule without insulating collar)

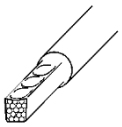

Two stranded wire, rod terminal (Twin ferrule with insulating collar)

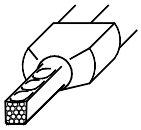

In case of flexible stranded wire, please be careful not to loosen the wire. There is a rod terminal as a preventive measure.
Rod terminal of recommendation, please refer to the following.
Also, please use a dedicated crimping tool to rod terminal.

Twin ferrule with insulating collar can crimp more two standard wires at the same time.
Please use in the case of two wires to crossover wiring, such as one

- Rod terminal : WAGO, Ferrule with insulating collar ／ Ferrule without insulating collar, 216 series
- Crimping tool : WAGO, Ferrule crimping tool 206-204 (Applicable wire : 0.25 mm^2 to 4 mm^2)
- Please use a rod terminal that matches the wire size.
- The tip of the wire, please cut the length of the rod terminal (or about 0.5 mm long).
- After the rod terminal crimping, please check the appearance.

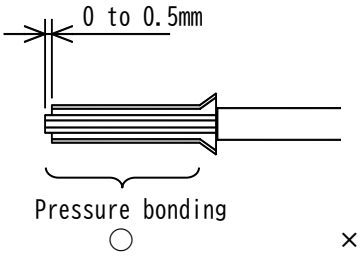

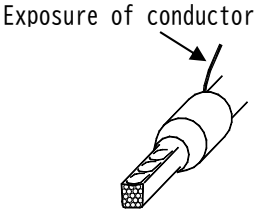

× Exposure of conductor

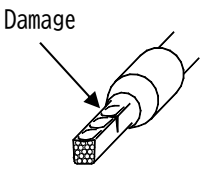

× Damage to the side

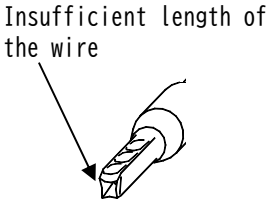

× Wire peeling shortage

(2) Connection method

① Stripping 5 to 6mm a coating of the tip of the wire. Or, crimping the rod terminal.
The screwdriver of the flat-blade screwdriver cutting edge (3.5mm×0.5mm)

② Insert the screwdriver to screwdriver insertion slot, open the spring.

③ To insert the wire to the wire insertion slot.

④ Pull out the screwdriver, close the spring.

【Recommended screwdriver】
Cutting edge 3.5mm×0.5mm
WAGO made screwdriver：210-720, 210-657, 210-658, 210-120J, 210-350/01, 210-258J

①

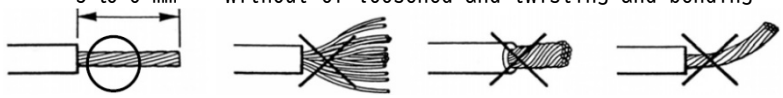

②

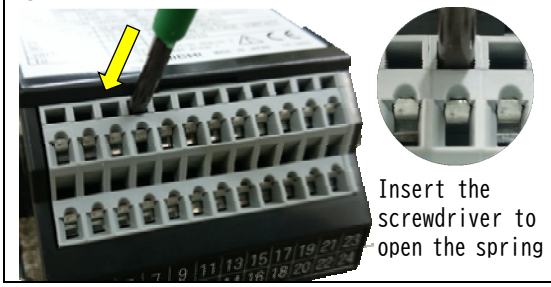

③

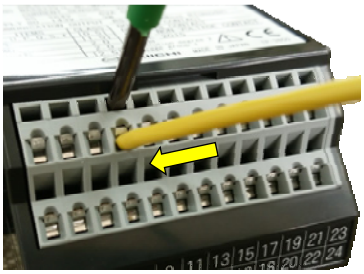

④

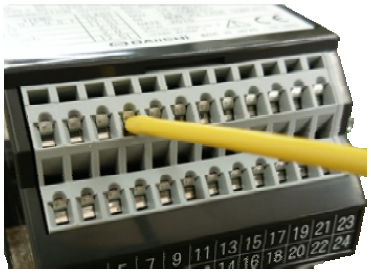

【Screwdriver and wire insertion slot】

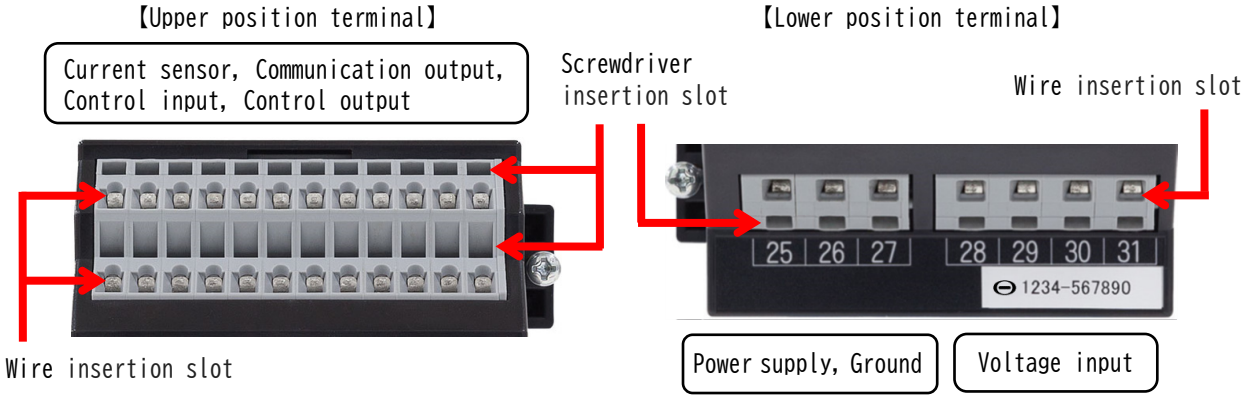

4. Connection (3)(4)

For current input, use in combination with a dedicated current sensor.
Direct wiring to the secondary side of the instrument current transformer will damage this product.

4.1 Circuits over 200A, high voltage circuits (3)(4)(5)

■ 3 phase 3 wire (2VT2CT)

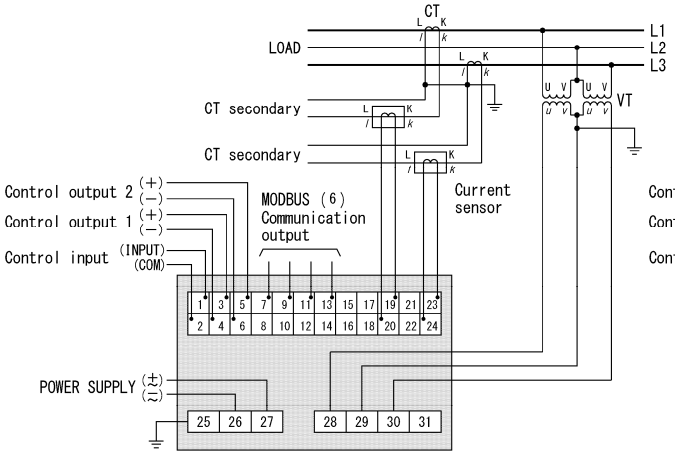

■ 1 phase 3 wire

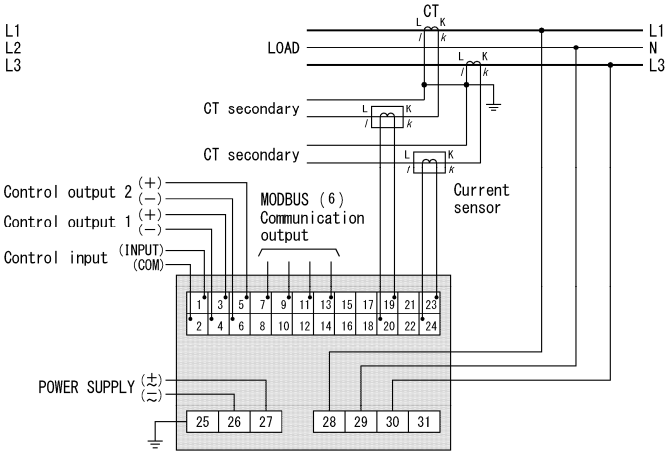

■ 1 phase 2 wire

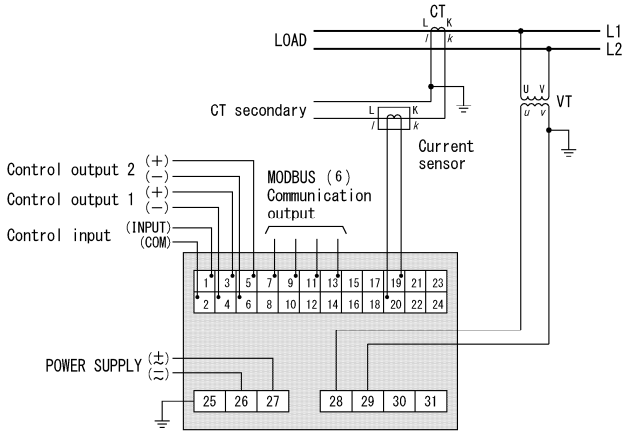

Current sensor connection diagram of circuit of 200A or more and high-voltage circuit. (4)

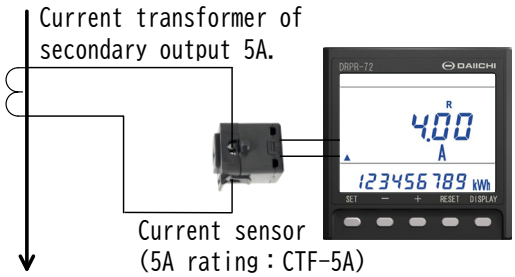

4.2 Low voltage circuit 200A

■ 3 phase 3 wire (2VT2CT)

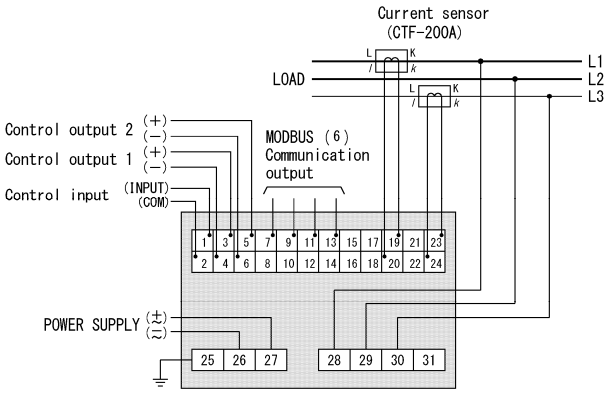

Wiring of communication output (6)
【Daisy chain (line type】【Termination unit】

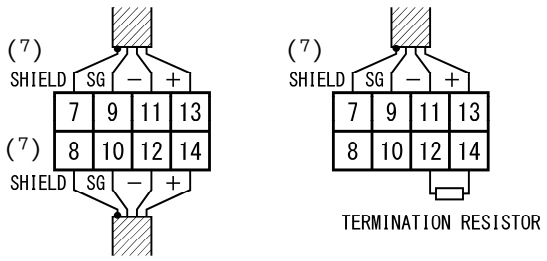

<Note>
Please use a twisted cable for the secondary wiring of the current sensor in consideration of inductive noise.
Please use a cable size of 0.5SQ or more (finished outer diameter 3mm or less).

・The maximum rated voltage is shown in the table below.

Wiring type	3 phase 3 wire (Ground)	3 phase 3 wire (Ungrounded)	1 phase 2 wire (Ground)	1 phase 2 wire (Ungrounded)	1 phase 3 wire
	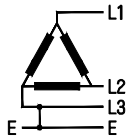	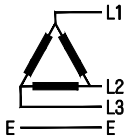	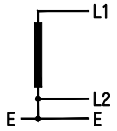	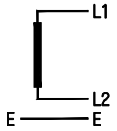	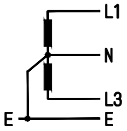
Maximum rated voltage	220V(L-L)	480V(L-L)	220V(L-L)	480V(L-L)	220V(L-N) 440V(L-L)

Note(3) In case of the low-voltage circuit (600V or less), the secondary grounding of VT / CT is not required. In case of the 110V / 220V / 440V direct input, VT is not required.

Note(4) When using with a circuit of 200A or more, please connect the current sensor of the 5A rated the (CTF-5A) on the secondary side of the instrument for the current transformer (secondary 5A).

Note(5) In case of the high-voltage circuit, using instrument transformers (VT), and instrument for the current transformer (CT) of secondary rated 5A, please ground the secondary side.
Current sensor in the secondary of the current transformer, please connect the current sensor (CTF-5A) of 5A rating.

Note(6) Communication output terminal (7-8, 9-10, 11-12 ,13-14) are connected internally respectively.
In case of the daisy chain, please connect in accordance with the 9 pages figure.
Termination resistor for the communication output, please use at the end of equipment.
Please connect the termination resistor between the terminals (+)(−) of communication output.

Note(7) This terminal is for relaying shielded wires of communication cables (for cross wiring).
This terminal is not connected to ground or internal common.

5. Operation and display

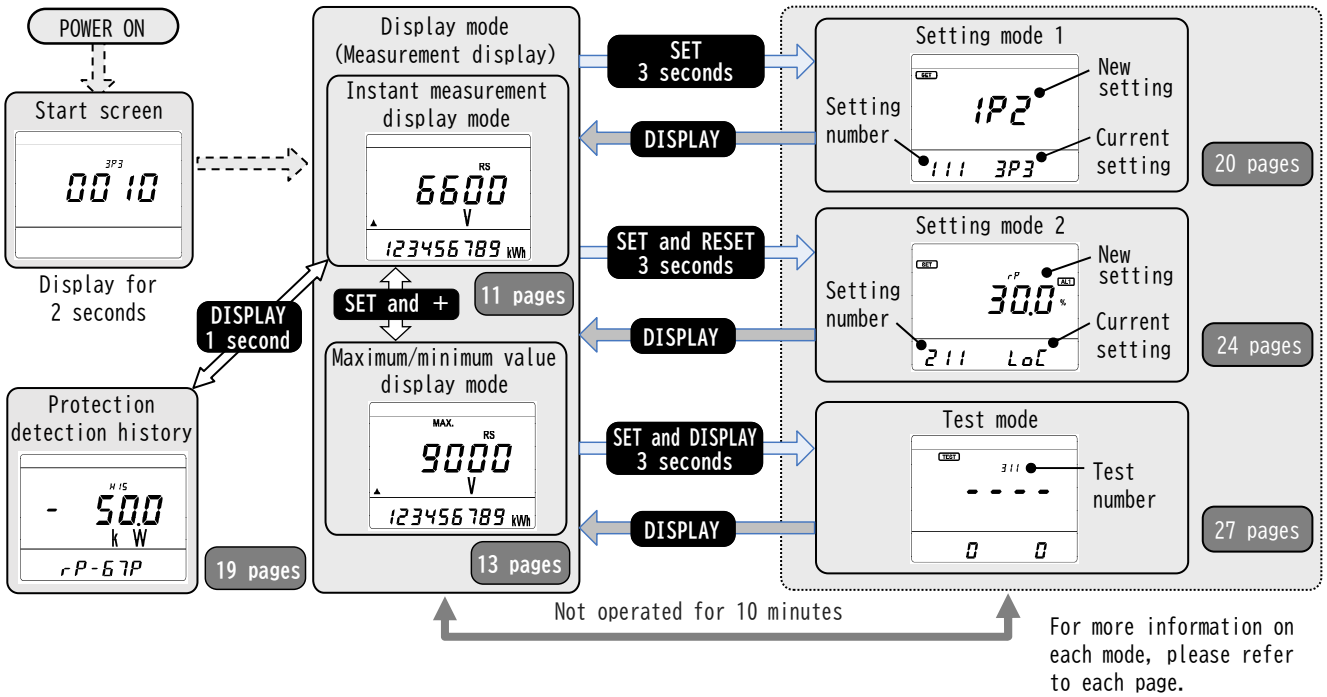

For more information on each mode, please refer to each page.

6. Display mode

6.1 Measurement display

About active energy status display	
●	Flashes while the amount of active energy is being measured. When the amount of electric energy is not being measured, the display is off.

Switch	Operation
SET	Switching between valid operation screens
−／＋	Switching of measurement items
RESET (Press for more than 1 second)	Reset of each alarm (Instant measurement display mode)
	Reset of maximum value / minimum value (Maximum / Minimum value display mode)
DISPLAY	Switching of phase / line / average value (AVG) for measurement display
SET (Press for more than 3 seconds)	Switch to setting mode 1
SET and RESET (Press for more than 3 seconds)	Switch to setting mode 2
SET and DISPLAY (Press for more than 3 seconds)	Switch to test mode

About the measurement items symbol	
U	Voltage
I	Current
Id	Demand current
P	Active power
Pd	Demand active power
Q	Reactive power
S	Apparent power
PF	Power factor
f	Frequency
Wh	Active energy
varh	Reactive energy

6.2 Instant measurement display mode

(1) Switching of main-monitor display

Press the SET switch, to display the【▲】(operation effective display).
Then by pressing the + − switch the displays of the main-monitor.

〔 Voltage (U) display 〕 〔 Current (I) display 〕 〔 Demand current (Id) display 〕

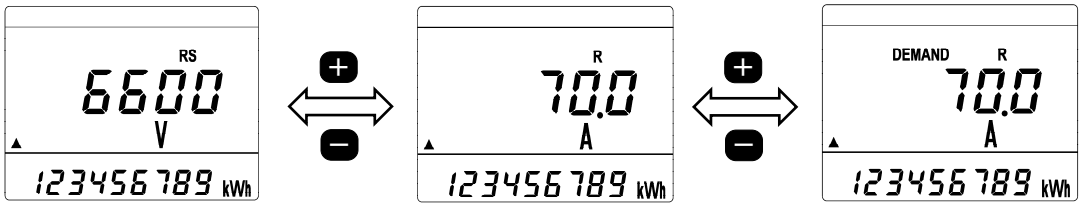

Measuring is switched in the following order.

U ⇔ I ⇔ Id ⇔ P ⇔ Pd ⇔ Q ⇔ S ⇔ PF ⇔ f ⇔ OFF

(2) Switching of the sub-monitor display element

Press the SET switch, to display the【▼】(operation effective display).
Then by pressing the + − switch the displays of the sub-monitor.

〔Active power (P) display〕 〔Reactive power (Q) display〕 〔Receiving active energy (Wh) display〕

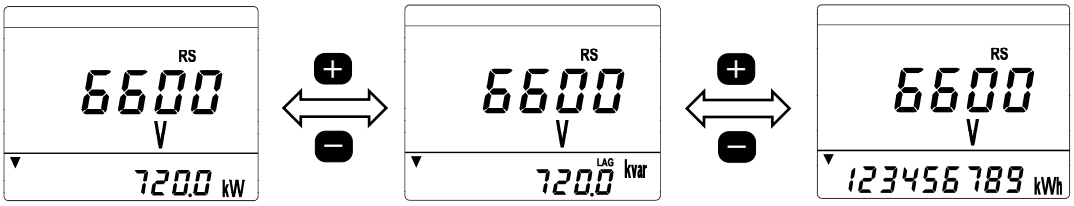

Measuring is switched in the following order.

P ⇔ Q ⇔ Wh ⇔ -Wh ⇔ varh(LAG) ⇔ varh(LEAD) ⇔ -varh(LAG) ⇔ -varh(LEAD) ⇔ OFF

(3) Switching of phase (line) / average value (AVG) display

By pressing the DISPLAY switch the phase (line) display of the main-monitor.

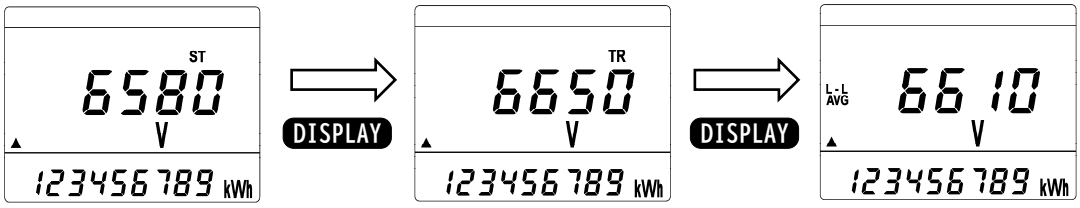

Measuring is switched in the following order.

	Measurement element (1, 2, 3, N : Phase, AVG : Average)	
	3 phase 3 wire	1 phase 3 wire
Voltage	U(L1-2) ⇔ U(L2-3) ⇔ U(L3-1) ⇔ U(L-L AVG)	U(L1-N) ⇔ U(L3-N) ⇔ U(L1-3) ⇔ U(L-N AVG)
Current, Demand current	I(L1) ⇔ I(L2) ⇔ I(L3) ⇔ I(AVG)	I(L1) ⇔ I(L3) ⇔ I(N) ⇔ I(AVG)
Active power, Demand active power	—	—
Reactive power	—	—
Apparent power	—	—
Power factor	—	—

Display of phase / line, can be switched in the settings.

Setting	L123N	RSTN	UVWN
Phase, line display	L1	R	U
	L2	S	V
	L3	T	W
	N	N	N

6.3 Maximum value / Minimum value display mode

Pressing the SET and + at instant measurement display mode, the switches to the maximum value display mode.
(In maximum value display mode, to display the "MAX.")
Pressing the SET and + at maximum value display mode, the switches to the minimum value display mode.
(In minimum value display mode, to display the "MIN.")
The maximum value/ minimum value display mode, will be switched to the measuring pressing the +− switch.
And, pressing the DISPLAY switch the phase (line).

〔Instant measurement display mode〕 〔Maximum value display mode〕 〔Minimum value display mode〕

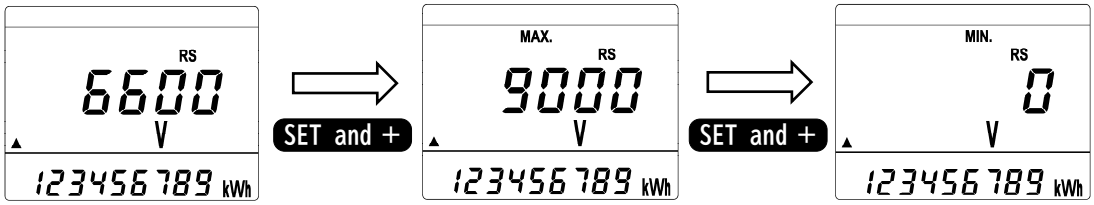

6.4 Reset

(1) Control output reset

The control output can be reset by pressing the RESET switch for 1 second or more on the protection detection screen or instant measurement display mode. However, this is limited to when the control output return method setting is set to "HoLd (manual return)" and the protection detection is restored.
If the return method setting is "Auto (automatic return)", the control output is automatically reset when protection detection returns.
For detailed control output reset, refer to 7. Protection function.

<Note> When the carry out this operation in the maximum / minimum measurement display mode, the maximum value / minimum value of measurement element in display is reset. Always instant measurement display mode, please carry out this operation.

(2) Maximum value ／ Minimum value reset

Resets the maximum value and the minimum value of the various measurement values.
Reset method has the two types.
Reset each measurement individually. Collectively reset all of the maximum value / minimum value.

a) Reset each measurement individually
Resets the maximum and minimum values of a particular measurement element.
This operation does not reset the other maximum value and minimum value.

① Displays the measurement that want to reset.

② Press the RESET for more than 1 second.

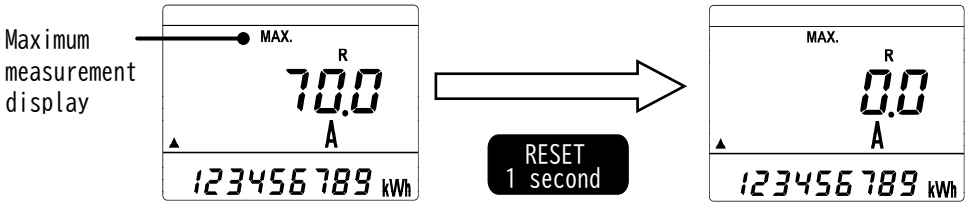

Maximum value display mode　　Reset completion

b) Collectively reset
Resets the maximum and minimum values of all measurement.
Can be operated in the same way in the control input by the setting.

① Press RESET and + simultaneously for 1 second or longer in the maximum/minimum value measurement display mode.

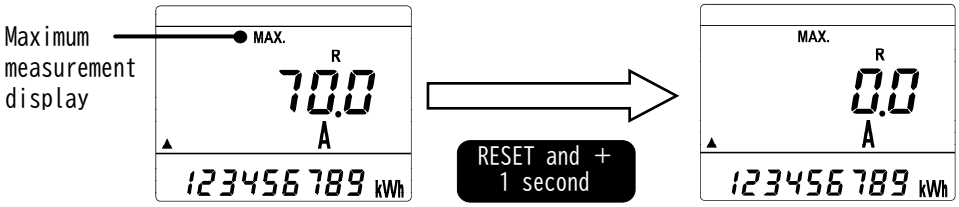

Maximum value display mode　　Reset completion

6.5 Setting value display mode

From the instant measurement display mode, press SET and − to enter setting value display mode.
In the setting value display mode, pressing the +− switch switches the setting item, allowing you to check the current setting value of each setting item.
If the switch is not operated for 10 seconds or if the DISPLAY switch is pressed, it will return to the instantaneous measurement display mode.

【Instant measurement display mode】　【111 Phase wire method setting】　【231 Control input function】

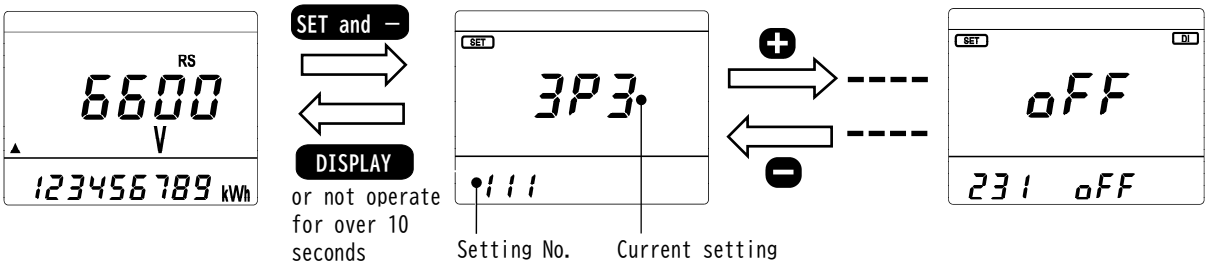

7. Protection functions

7.1 Protection detection block diagram

■ Reverse power RP

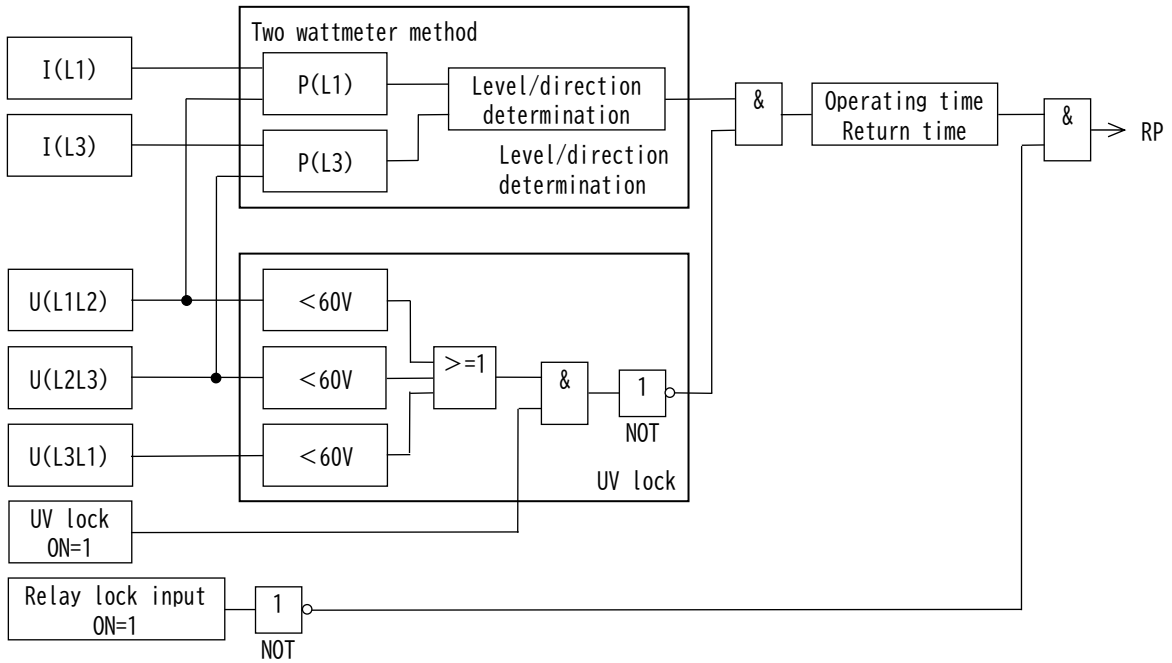

■ Under power UP

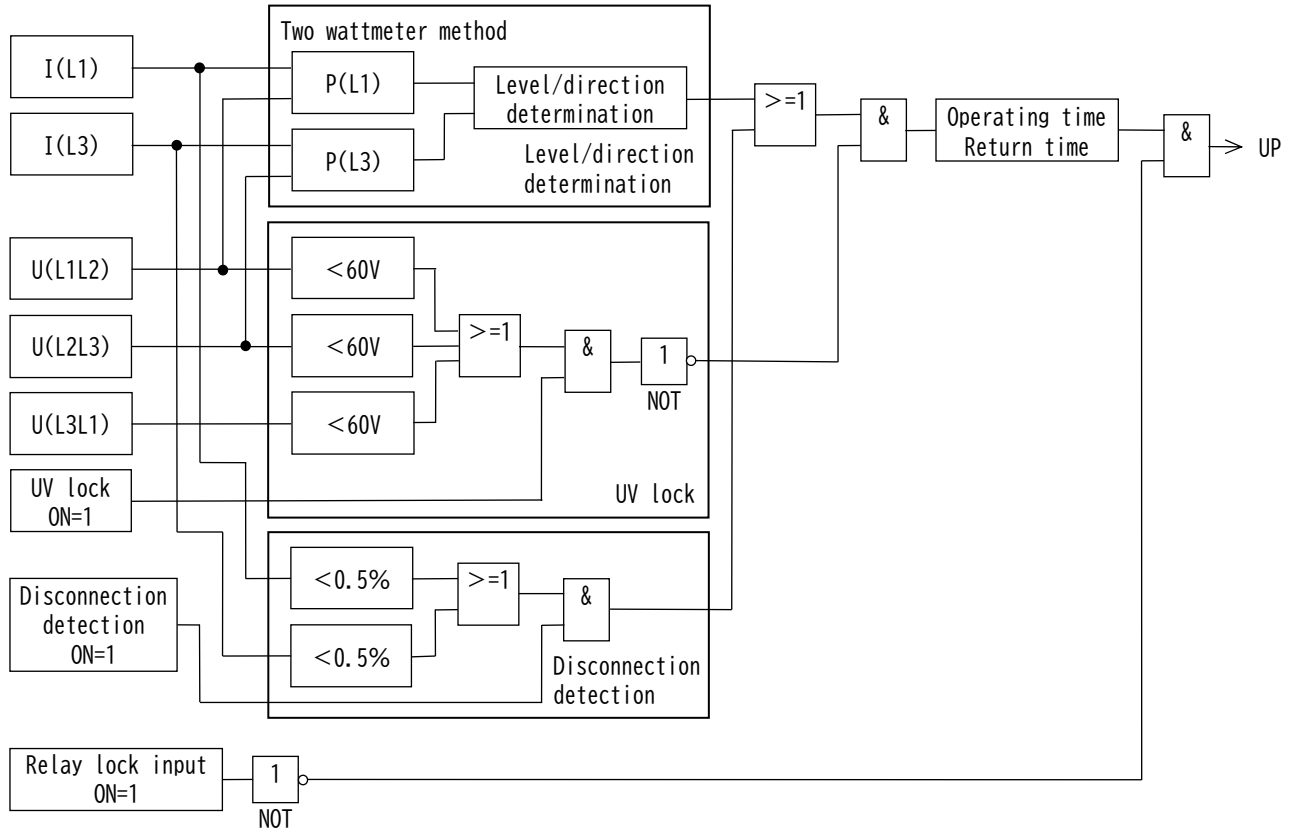

7.2 Protection detection

(1) Protection detection operation

Element	Protection detection operation
Reverse power [RP] (67P)	① If the operating value is exceeded and the operating time is within, the pre-alarm display **H1** and reverse power detection display **H2** flicker on the LCD. ② When the operating time set value is exceeded, the LCD automatically switches to the protection detection screen and control output 1 is ON. The protection detection screen displays the maximum value at the time of detection for the main monitor. In addition, the secondary monitor displays protection detection elements. ③ When the detection returns, the LCD retains the protection detection element and the maximum value. When the control output 1 return method setting is "Auto (Auto return)", the control output 1 is OFF. <Caution> If the backlight operation setting is set to "Auto (Auto off)", the backlight will turn on when reverse power is detected. In addition, the backlight is always on during the protection detection screen.

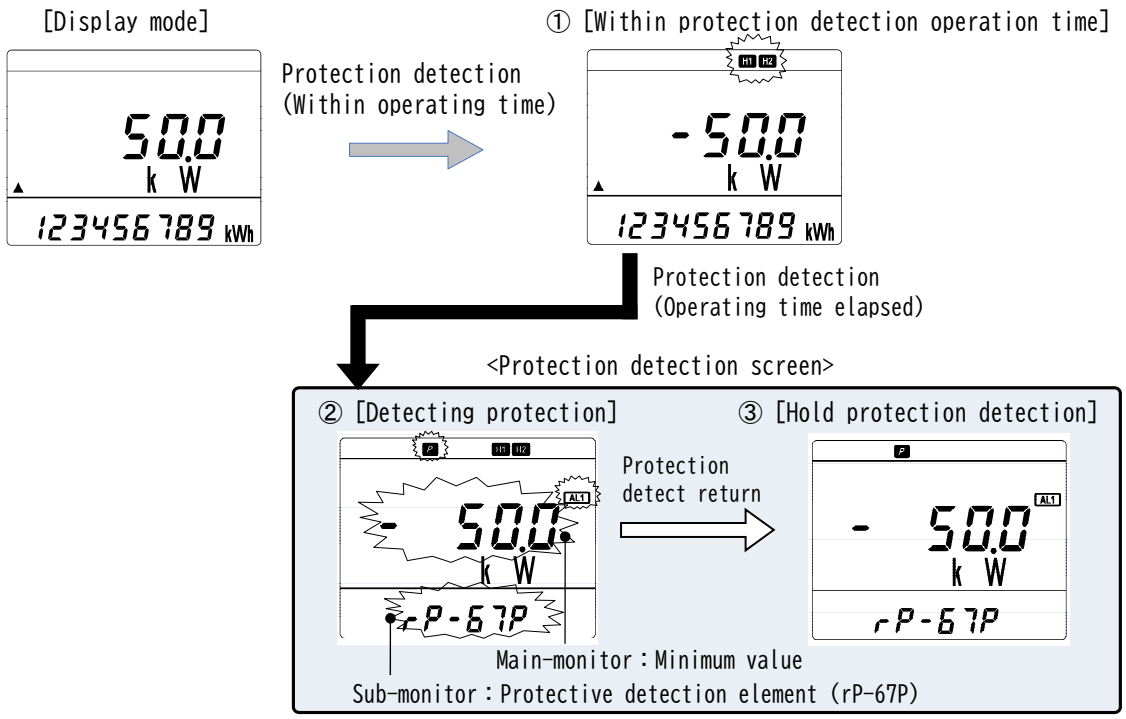

Explanation of display symbols

Mark	Content	Within protection detection operation time	Detecting protection	Holding protection detection
H1	Reverse power pre-alarm	Flicker display	Display ON	Display OFF
H2	Reverse power detection	Flicker display (within pre-alarm operating time)	Display ON	Display OFF
P	Protection detection	Display OFF	Flicker display	Display ON
AL1	Control output 1	Display OFF	Flicker display	Display OFF (Auto return) Display ON (Manual return)

Element	Protection detection operation
Under power [UP] (91L)	① If the operating value is exceeded and the operating time is within, the under power detection display **L** flicker on the LCD. If the input value is less than 0.5% of the rated current, the disconnection detection display **/** will flicker at the same time. ② When the operating time set value is exceeded, the LCD automatically switches to the protection detection screen and control output 2 is ON. The protection detection screen displays the minimum value at the time of detection for the main monitor. In addition, the secondary monitor displays protection detection elements. ③ When the detection returns, the LCD retains the protection detection element and the minimum value. When the control output 2 return method setting is "Auto (Auto return)", the control output 2 is OFF. <Caution> If the backlight operation setting is set to "Auto (Auto off)", the backlight will turn on when under power is detected. In addition, the backlight is always on during the protection detection screen.

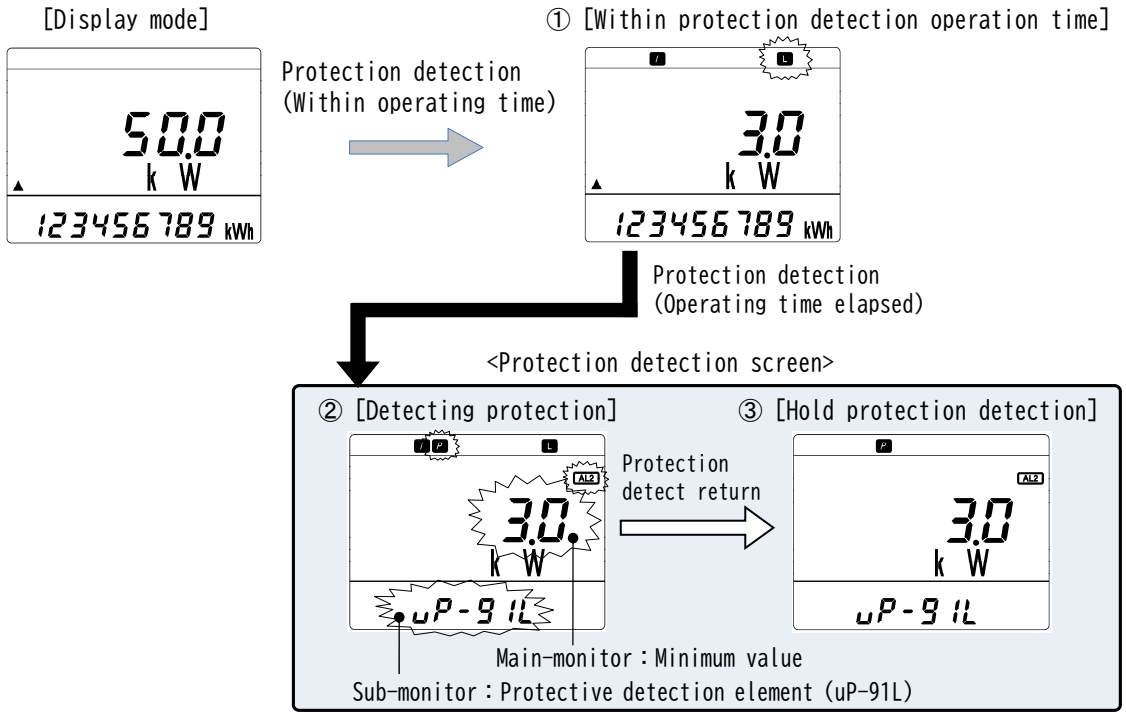

Explanation of display symbols

Mark	Content	Within protection detection operation time	Detecting protection	Holding protection detection
L	Under power detection	Flicker display	Display ON	Display OFF
P	Protection detection	Display OFF	Flicker display	Display ON
AL2	Control output 2	Display OFF	Flicker display	Display OFF (Auto return) Display ON (Manual return)

(2) Return operation

If the **RESET** switch is pressed for 1 second or longer after return from protection detection, the protection detection screen will be canceled and the display will return to the instantaneous measurement display mode. At this time, if the return method setting of control output 1 or control output 2 is "Hold (manual return)", the control output is also turned OFF at the same time.

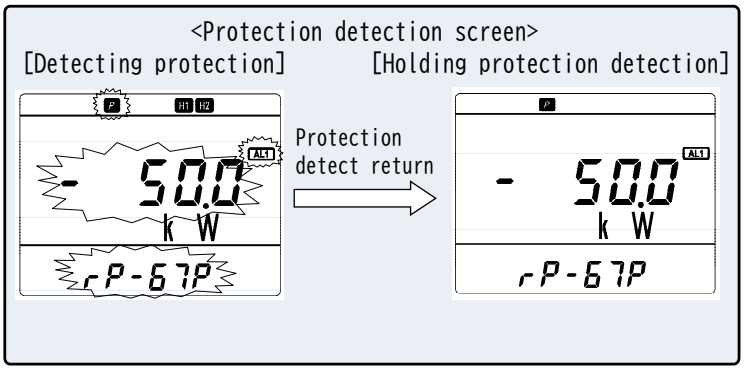

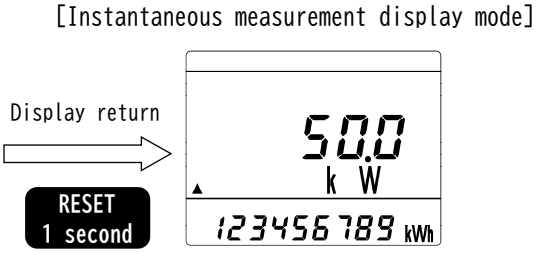

If the control output return method setting is "Hold (manual return)", the control output will also return at the same time.

(3) Special operation when protection is detected

If the **DISPLAY** switch is pressed for 1 second or more during protection detection display, it will switch to instantaneous measurement display mode.
After return from protection detection, press the **RESET** switch for 1 second or more to release the protection detection state.

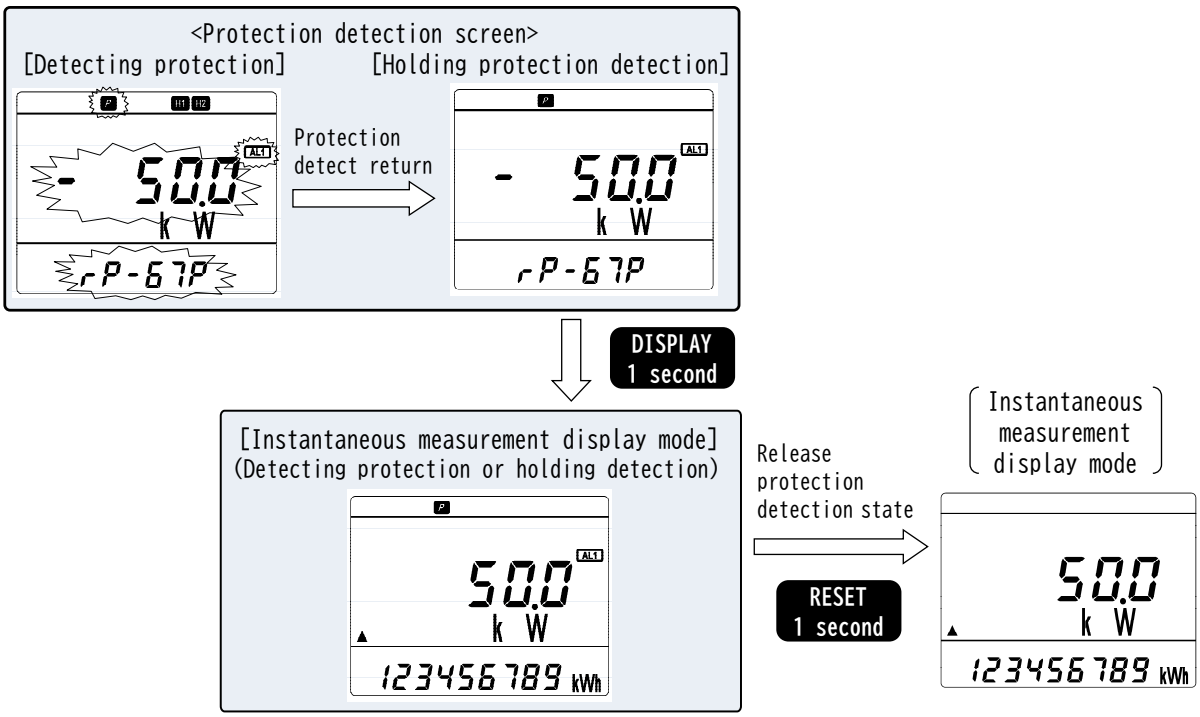

<Note> If the switch from the protection detection screen to the instantaneous measurement display mode, you cannot return to the protection detection screen. To check the maximum value during protection detection, check the protection detection history display.

7.3 Protection detection history

(1) Protection detection history display

The most recent detection value is recorded for the record of protection detection by reverse power detection and under power detection.
Pressing the **DISPLAY** switch for 1 second or longer from the instantaneous measurement display mode switches to the protection detection history display.
In protection detection history display, the detection value (maximum value during detection) of each protection element is displayed.
The maximum value of protection elements without detection history is displayed as "————".

[Instantaneous measurement display mode]

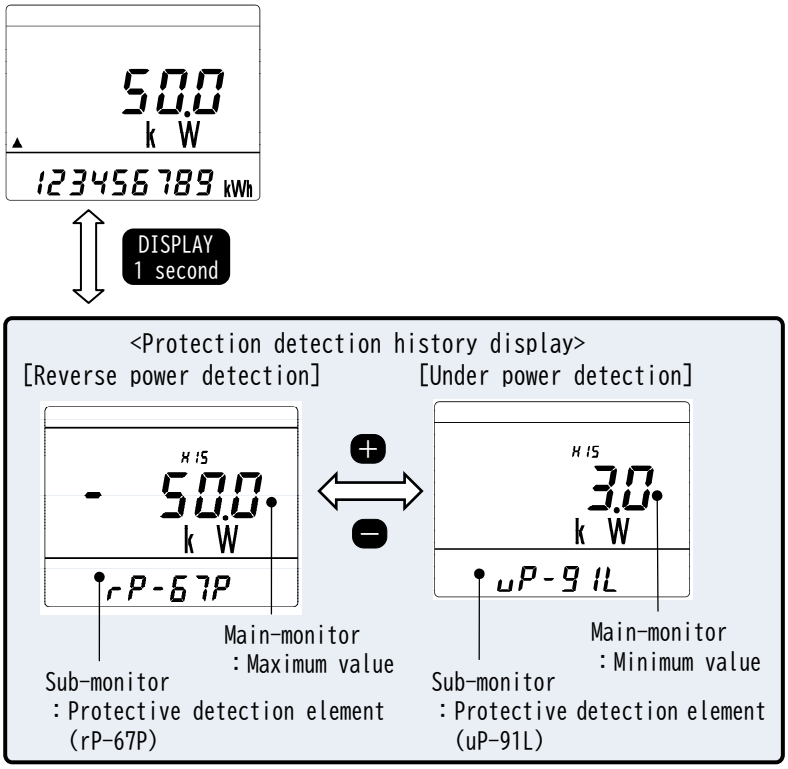

HIS : HISTORY

(2) Protection detection history reset

When the **RESET** and **+** switch is pressed for 1 seconds or more while the protection detection history is displayed, the detection history being displayed is reset.

[Reverse power detection]

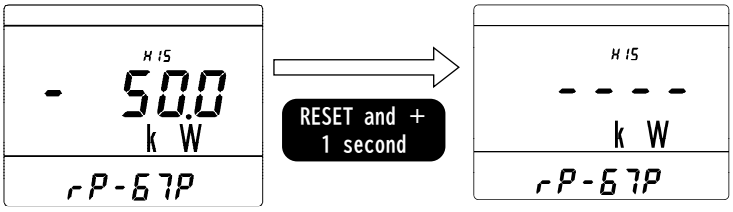

[Under power detection]

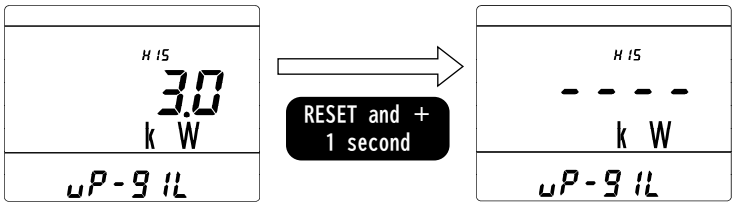

8. Setting

8.1 Setting mode 1
(Setting of circuit, input, interval, reactive power, communication output, backlight action)

(1) Setting mode 1 flowchart

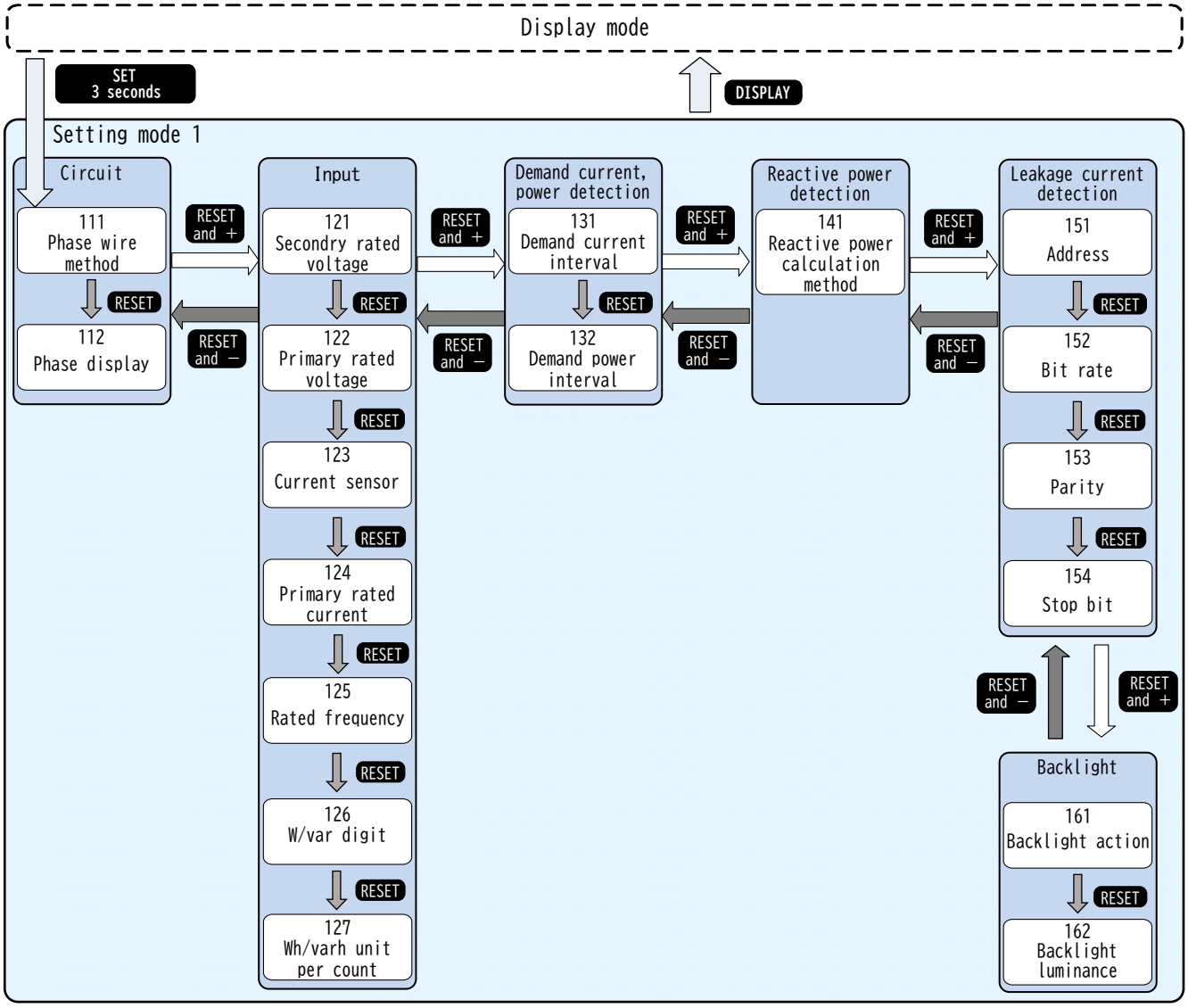

(2) Circuit

Setting No.	Setting item	Contents of setting
111	Phase wire method	Set the phase wire method of the input circuit. Setting value is selecting in the ⊕⊖. To update the setting value in the SET. Input circuit: 3-phase 3-wire 3P3; 1-phase 3-wire 1P3; 1-phase 2-wire 1P2 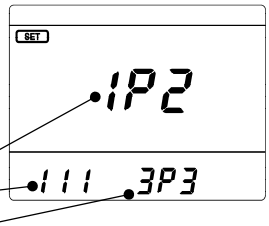 New setting / Setting number / Current setting
112	Phase display	Set the display method of the phases and lines. Setting value is selecting in the ⊕⊖. To update the setting value in the SET. Phase display: L123N 0; RSTN 1; UVWN 2 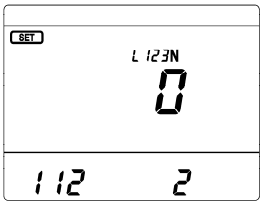

(3) Input

Setting No.	Setting item	Contents of setting
121	Secondary rated voltage	Set the secondary rated voltage according to the VT used. Setting value is selecting in the ⊕⊖. To update the setting value in the SET. Secondary rated voltage: 110V / 220V / 440V 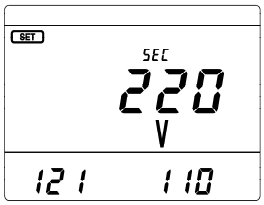 <Note> When using direct connection, set the primary rated voltage setting and secondary rated voltage setting to the same value.
122	Primary rated voltage	Set the primary rated voltage relative to the secondary rated voltage. Setting value is selecting in the ⊕⊖. To update the setting value in the SET. 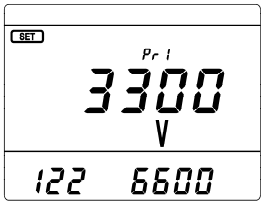 No. / Primary rating 1 / 110.0V 2 / 110V 3 / 220.0V 4 / 220V 5 / 380V 6 / 400V 7 / 415V 8 / 440V 9 / 460V 10 / 480V 11 / 690V 12 / 880V 13 / 990V 14 / 1100V 15 / 1650V 16 / 2200V 17 / 2.20kV 18 / 3300V 19 / 3.30kV 20 / 6600V 21 / 6.60kV 22 / 11.00kV 23 / 13.20kV 24 / 13.80kV 25 / 16.50kV 26 / 18.40kV 27 / 20.00kV 28 / 22.00kV 29 / 33.00kV 30 / 66.00kV 31 / 77.0 kV 32 / 110.0kV <Note> When using direct connection, set the primary rated voltage setting and secondary rated voltage setting to the same value.
123	Current sensor	Set the current sensor to be used. Setting value is selecting in the ⊕⊖. To update the setting value in the SET. Current sensor: 5A / 200A 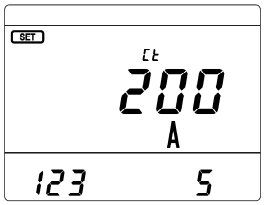 <Note> When using in a high-voltage circuit or a circuit exceeding 200A, set the current sensor to 5A and use it in combination with a general-purpose instrument current transformer.
124	Primary rated current	Set the primary rated current. Setting value is selecting in the ⊕⊖. To update the setting value in the SET. <For current sensor 5A> No. / Primary rating (/5A) 1 / 5.00A 2 / 6.00A 3 / 7.50A 4 / 8.00A 5 / 10.00A 6 / 12.00A 7 / 15.00A 8 / 20.00A 9 / 25.00A 10 / 30.00A 11 / 40.0A 12 / 50.0A 13 / 60.0A 14 / 75.0A 15 / 80.0A 16 / 100.0A 17 / 120.0A 18 / 150.0A 19 / 200.0A 20 / 250.0A 21 / 300.0A 22 / 400A 23 / 500A 24 / 600A 25 / 750A 26 / 800A 27 / 900A 28 / 1000A 29 / 1200A 30 / 1500A 31 / 1600A 32 / 1800A 33 / 2000A 34 / 2500A 35 / 3000A 36 / 3500A 37 / 4000A 38 / 4500A 39 / 5000A 40 / 6000A 41 / 7500A 42 / 8000A 43 / 9.00kA 44 / 10.00kA 45 / 12.00kA 46 / 15.00kA 47 / 20.00kA 48 / 30.00kA <For current sensor 200A> No. / Primary rating 1 / 200.0A 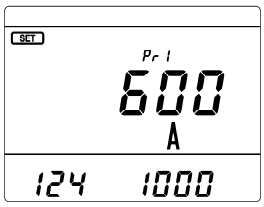 <Note> The selectable range differs depending on the setting No.123 current sensor setting.

Setting No.	Setting item	Contents of setting
125	Rated frequency	Set the rated frequency. Setting value is selecting in the ⊕⊖. To update the setting value in the SET. Rated frequency: 50.0Hz / 60.0Hz 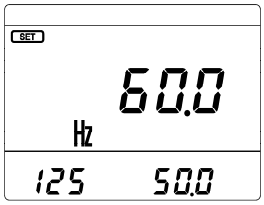
126	W/var digit	Set the display digits for active power and reactive power. Setting value is selecting in the ⊕⊖. To update the setting value in the SET. W/var digit: 3 digits / 4 digits 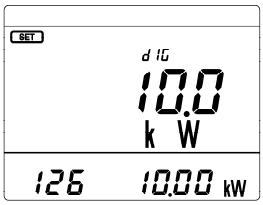
127	Wh/varh unit per count	Set the unit for the minimum count value of the energy display. Counts up to 9 digits (999999999) with the settled unit as the least significant digit, and counts from 0 again if the maximum value is exceeded. Setting value is selecting in the ⊕⊖. To update the setting value in the SET. 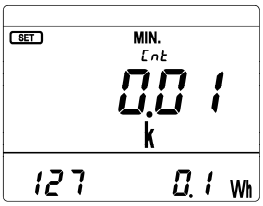

Full load power kW/kvar (8)		Setting value kWh/kvarh			
	Below 1	0.01	0.001	0.0001	0.00001
Over 1	Below 10	0.1	0.01	0.001	0.0001
Over 10	Below 100	1	0.1	0.01	0.001
Over 100	Below 1,000	(9) 10	1	0.1	0.01
Over 1,000	Below 10,000	(9) 100	(9) 10	1	0.1
Over 10,000	Below 100,000	(9) 1,000	(9) 100	(9) 10	1
Over 100,000	Below 1,000,000	Disable	(9) 1,000	(9) 100	(9) 10
Over 1,000,000	Below 10,000,000	Disable	Disable	(9) 1,000	(9) 100

Note(8) Full load power (kW/kvar)
$= K \times$ Primary rated voltage [V] $\times$ Primary rated current [A] $\times 10^{-3}$
(K : 3 phase 3 wire $=\sqrt{3}$, 1 phase 3 wire $=2$, 1 phase 2 wire $=1$)
Note(9) Units of display of the integrated power energy is MWh / Mvarh.

(4) Demand current, power detection

Setting No.	Setting item	Contents of setting
131 132	Demand current interval Demand power interval	Set the demand current and demand power measurement interval. Setting value is selecting in the ⊕⊖. To update the setting value in the SET. The display at the time of setting is displayed as second → s, minute → min. 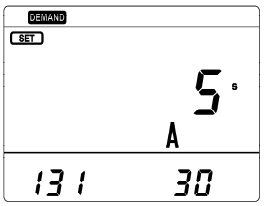 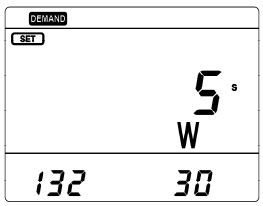

Interval			
0 second	50 seconds	6 minites	20 minites
5 seconds	1 minite	7 minites	25 minites
10 seconds	2 minites	8 minites	30 minites
20 seconds	3 minites	9 minites	
30 seconds	4 minites	10 minites	
40 seconds	5 minites	15 minites	

(5) Reactive power

Setting No.	Setting item	Contents of setting
141	Reactive power calculation method	Set the calculation method of reactive power. Setting value is selecting in the ⊕⊖. To update the setting value in the SET. Reactive power calculation method Q=UIsinφ : 0 Q=√(S²−P²) : 1 SET 0 var 141 1

(6) Communication

Setting No.	Setting item	Contents of setting
151	Address	Set the device address for MODBUS communication output. Setting value is selecting in the ⊕⊖. To update the setting value in the SET. Address: 1 to 247 SET Adr 247 151 1
152	Bit rate	Set the bit rate (bps) for MODBUS communication output. Setting value is selecting in the ⊕⊖. To update the setting value in the SET. Bit rate 4800bps : 4.80k 9600bps : 9.60k 19200bps : 19.20k 38400bps : 38.40k SET bPS 9.60 k 152 38.40 k
153	Parity	Set the parity for MODBUS communication output. Setting value is selecting in the ⊕⊖. To update the setting value in the SET. Parity Nothing : — Even number : E Odd number : o SET PAr o 153 E
154	Stop bit	Set the stop bit for MODBUS communication output. Setting value is selecting in the ⊕⊖. To update the setting value in the SET. Stop bit 1 bit : 1 2 bit : 2 SET StP 2 154 1

(7) Backlight

Setting No.	Setting item	Contents of setting
161	Backlight action	Set the backlight action. Setting value is selecting in the ⊕⊖. To update the setting value in the SET. Backlight action Auto off : Auto Always-on : on Always-off : oFF Auto off is lights off the backlight after 5 minutes of no switch operation. After lights off the backlight, operate any switch to lights on the backlight. SET bL1 oFF 161 Auto
162	Backlight luminance	Set the luminance of the backlight. Setting value is selecting in the ⊕⊖. To update the setting value in the SET. Backlight luminance Bright 5 4 3 2 Dark 1 SET bL2 5 162 3

8.2 Setting mode 2 (Setting of reverse power, under power, control input, initialization)

(1) Setting mode 2 flowchart

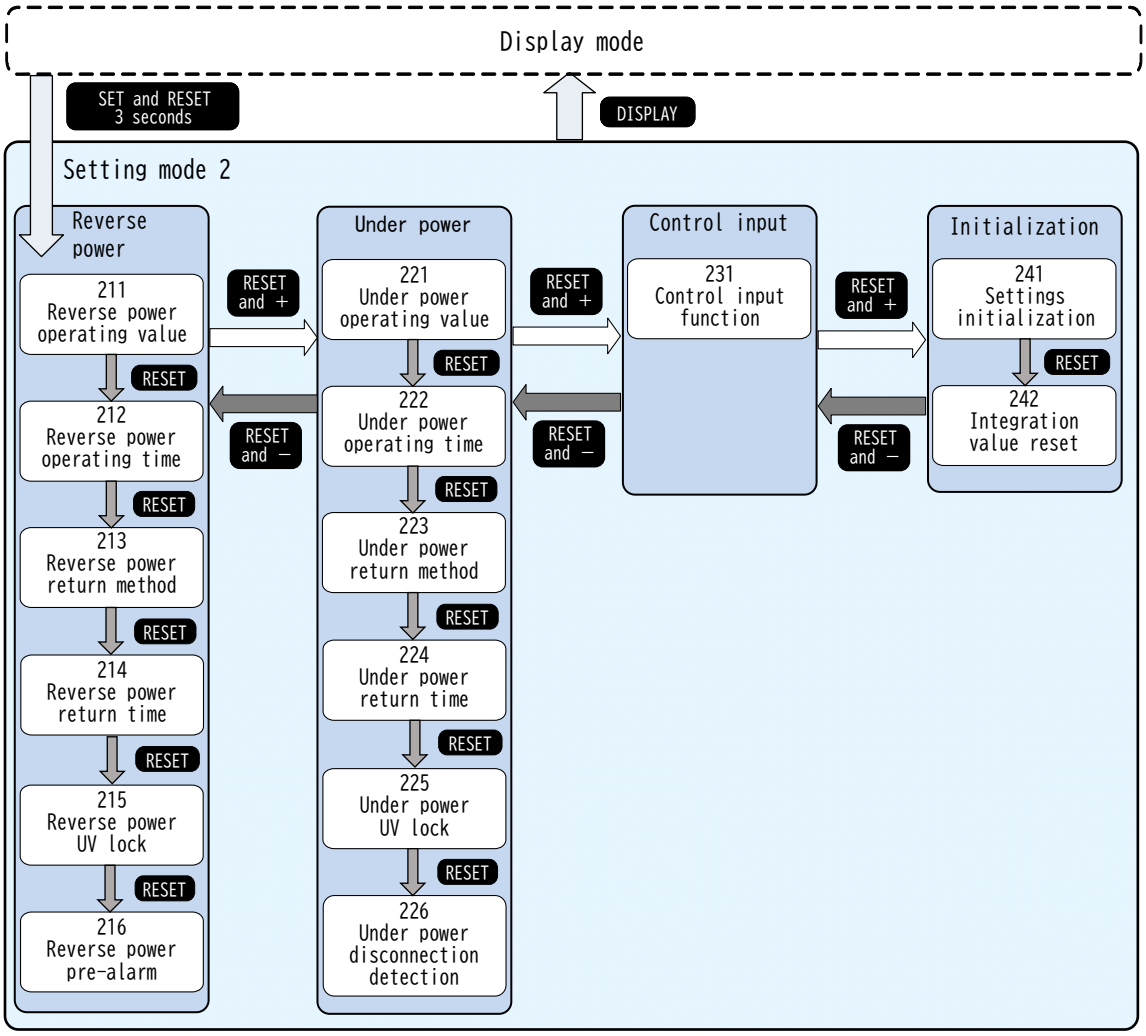

(2) Reverse power

Setting No.	Setting item	Contents of setting
211	Reverse power operating value	Set the operation value of reverse power detection. Setting value is selecting in the ⊕⊖. To update the setting value in the SET. Operating time: Lock, 0.2 to 30.0% (0.1% step) New setting Setting number Current setting
212	Reverse power operating time	Set the operating time for reverse power detection. Setting value is selecting in the ⊕⊖. To update the setting value in the SET. Operating time: 0.1 to 15.0 seconds (0.1 second step)
213	Reverse power return method	Set the control output 1 return method. Setting value is selecting in the ⊕⊖. To update the setting value in the SET. Return method: Auto return — Auto; Manual return — HoLd
214	Reverse power return time	Set the return time for reverse power detection. Setting value is selecting in the ⊕⊖. To update the setting value in the SET. Return time: 2 to 600 seconds (1 second step)
215	Reverse power UV lock	Set the ON/OFF of the reverse power detection UV lock function. Setting value is selecting in the ⊕⊖. To update the setting value in the SET. UV lock function: Unused — oFF; Use — on
216	Reverse power pre-alarm	Set the operating time of the reverse power pre-alarm. Setting value is selecting in the ⊕⊖. To update the setting value in the SET. Pre-alarm operating time: 0.1 to 1.0 seconds (0.1 second step)

(3) Under power

Setting No.	Setting item	Contents of setting
221	Under power operating value	Set the operating value of under power detection. Setting value is selecting in the ⊕⊖. To update the setting value in the SET. Operating value: Lock, 1.0 to 30.0% (0.1% step) 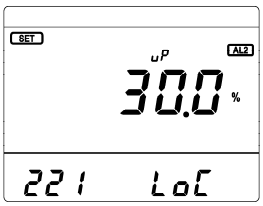
222	Under power operating time	Set the operating time of under power detection. Setting value is selecting in the ⊕⊖. To update the setting value in the SET. Operating time: 0.1 to 15.0 seconds (0.1 second step) 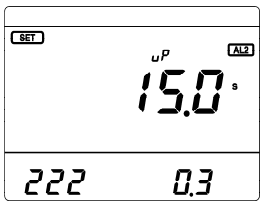
223	Under power return method	Set the control output 2 return method. Setting value is selecting in the ⊕⊖. To update the setting value in the SET. Return method: Auto return — Auto; Manual return — HoLd 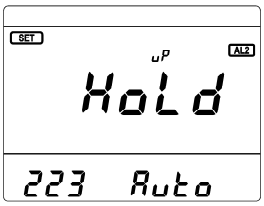
224	Under power return time	Set the return time for under power detection. Setting value is selecting in the ⊕⊖. To update the setting value in the SET. Return time: 2 to 600 seconds (1 second step) 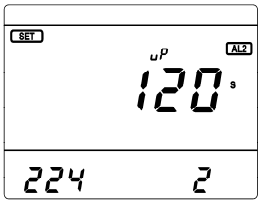
225	Under power UV lock	Set the ON/OFF of the under power detection UV lock function. Setting value is selecting in the ⊕⊖. To update the setting value in the SET. UV lock function: Unused — oFF; Use — on 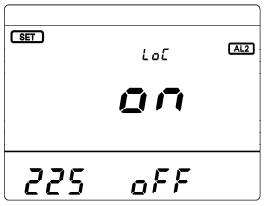
226	Under power disconnection detection	Set the ON/OFF of the under power disconnection detection function. Setting value is selecting in the ⊕⊖. To update the setting value in the SET. Disconnection detection function: Unused — oFF; Use — on 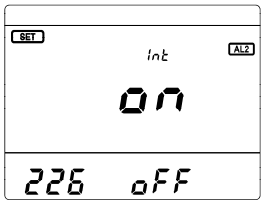

(4) Control input

Setting No.	Setting item	Contents of setting
231	Control input function	Sets the function of the control input. Setting value is selecting in the ⊕⊖. To update the setting value in the SET. Control input function Unused: oFF Relay lock input: r.LoC State input: StA. oFF / 231 oFF r.LoC / 231 oFF StA. / 231 oFF

(5) Initialization

Setting No.	Setting item	Contents of setting
241	Settings initialization	Pressing SET for 3 seconds initializes each setting value (returns to the initial setting value). dEF / 241
242	Integration value reset	Reset (=0) each power amount. Press SET for 3 seconds to reset all accumulated values. (Wh, -Wh, varh (LAG), -varh (LAG), varh (LEAD), -varh (LEAD)) rES / 242

9. Test mode

Test mode is equipped with features that can be utilized, such as during start-up of equipment.

<Note> During protection detection and detection hold, test mode cannot be entered.
Also, the protection detection function is disabled during the test mode.

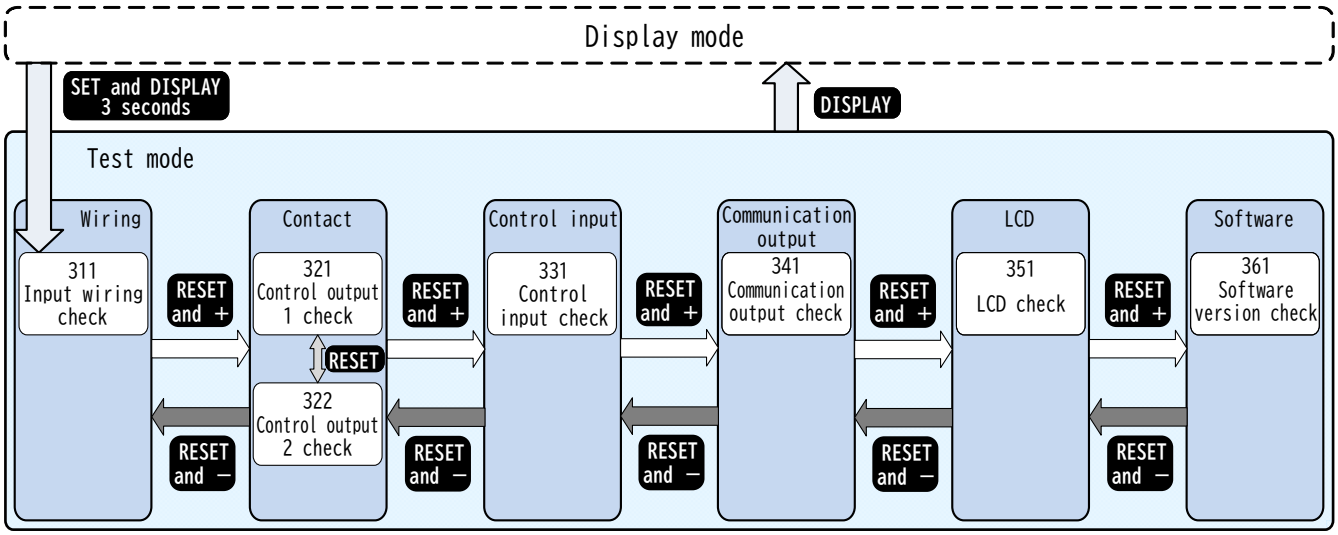

(1) Input wiring check

The connection state of voltage input and current input can be check.
Displays each phase of the active power value, and phase sequence of voltage.
Therefore, it will easily determine the mistake of connection of input.

Display example

● Phase display (3P3W)
Positive phase sequence "P" (Positive),
Negative phase sequence "n" (Negative),
Display when no input："----" (In case of 1P3W, 1P2W circuit："----")

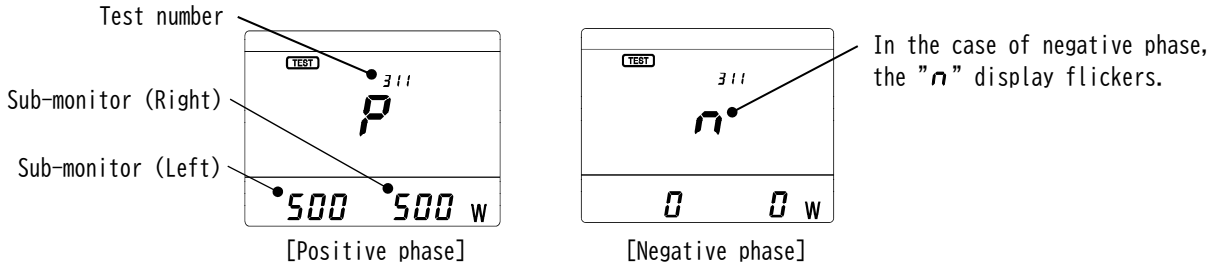

[Positive phase] [Negative phase]

● Active power display for each phase
Sub-monitor (Left) ：L1 phase of active power
Sub-monitor (Right)：L3 phase of active power

The three-phase power is calculated by the two-wattmeter method.

$$\text{Three-phase power} = \dot{V}_{12}\cdot\dot{I}_1 + \dot{V}_{23}\cdot\dot{I}_3 = \underbrace{V_{12}\cdot I_1\cdot\cos\phi 1}_{\text{(L1 phase power)}} + \underbrace{V_{23}\cdot I_3\cdot\cos\phi 3}_{\text{(L3 phase power)}}$$

Test mode displays the power of the L1 and L3 phases above.
Three-phase power (√3 × rated voltage × rated current × 1.05 × power factor 1) is displayed as 1000 (100.0%). Also, the L1 phase power is displayed as 500 (50.0%) and the L3 phase power as 500 (50.0%).
(In the case of a single-phase circuit, the L3 phase power is displayed as 0.)

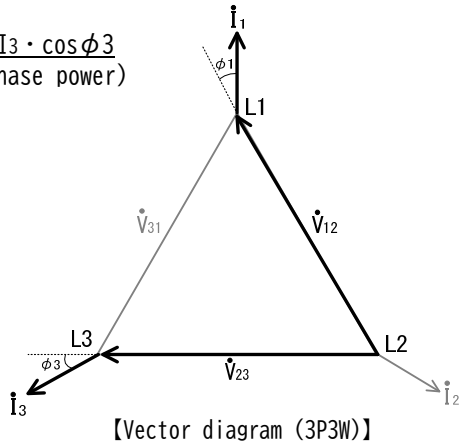

【Vector diagram (3P3W)】

● Input wiring confirmation example
Example 1) Input condition：3P3W 110V, 5.25A, Power factor 1
・Normal wiring
L1 phase active power = 110V×5.25A×cos 30° ≒ 500
L3 phase active power = 110V×5.25A×cos 330° ≒ 500
・Reverse wiring of primary side (K, L) or secondary side (k, l) of L1 phase current
L1 phase active power = 110V×5.25A×cos 210° ≒ -500
L3 phase active power = 110V×5.25A×cos 330° ≒ 500

Example 2) Input condition：3P3W 110V, 5.25A, Power factor LEAD 0.86
・Normal wiring
L1 phase active power = 110V×5.25A×cos (30° - 30.7°) ≒ 577
L3 phase active power = 110V×5.25A×cos (330° - 30.7°) ≒ 283
・Reverse wiring of primary side (K, L) or secondary side (k, l) of L1 phase current
L1 phase active power = 110V×5.25A×cos (210° - 30.7°) ≒ -577
L3 phase active power = 110V×5.25A×cos (330° - 30.7°) ≒ 283

<Note> All connection mistake can not determine.

(2) Control output check

Measurement (voltage, current) with no input, can check the operation of output.
The operation of Reverse power (control output 1) can be check by the [321].
The operation of Under power (control output 2) can be check by the [322].
『OFF (oFF)』: Control output OFF
『ON (on)』 : Control output ON
Switch the 『OFF (oFF)』⇔『ON (on)』 in the SET switch.
Please use it, such as the connection confirmation of the connection destination.

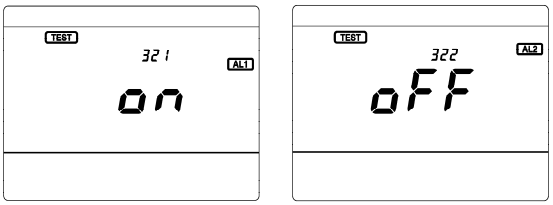

(3) Control input check

Check of control input
State of the control input is displayed on the screen.
『OFF (oFF)』: Control input OFF
『ON (on)』 : Control input ON

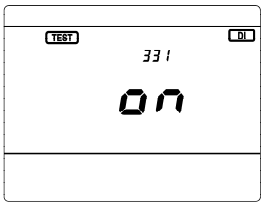

(4) Communication output check

Check of communication output
Measurement (voltage, current) with no input, numeric data of fixed communication output (0%, 50%, 100%, SEq) will be able to reply.
Select the numeric data in the + − switch, and press the SET switch, the measurement data of all measuring elements have been changed.
Numerical data: 0%, 50%, 100%, SEq (sequence number)
Please use it, such as counter test of the host system.
With regard to the sequence number, please refer to the "DRPR-72 Communication Specifications".

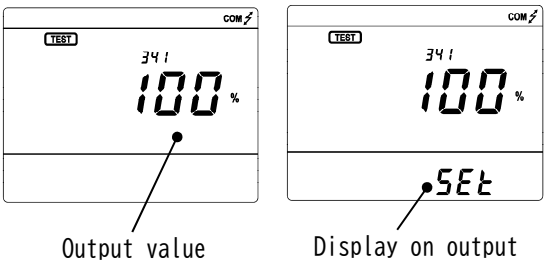

(5) LCD check

Check of LCD
The LCD can be check.
Every time the SET switch is pressed, display is switched over.

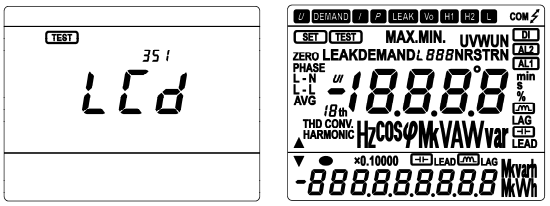

(6) Software version check

Software version
Version of the software can be check.

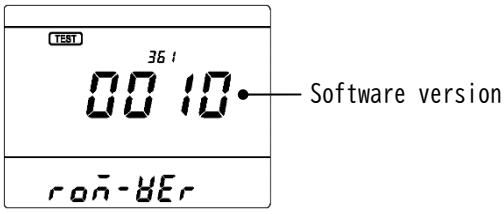

10. Specifications

(1) Rating

Item		Specifications			Note
Input circuit ([10])		Common use for 3 phase 3 wire [3P3W] (2VT2CT), 1 phase 3 wire [1P3W], 1 phase 2 wire [1P2W]			Settable
AC input	Rated voltage	3P3W, 1P2W : Common use for 110V AC, 220V AC, 440V AC, 50/60Hz			Settable
		1P3W : 100-200V AC 50/60Hz			
	Rated current	5A	Split type AC Current Sensor CTF-5A (MULTI MEASURING INSTRUMENTS Co., Ltd.)	CT secondary connection	Settable
		200A	Split type AC Current Sensor CTF-200A (MULTI MEASURING INSTRUMENTS Co., Ltd.)	Used for low voltage circuits	
Power supply	Power supply range and power consumption	85 to 264V AC (Rated voltage. 100/110V AC, 4VA) 50/60Hz (Rated voltage. 200/220V AC, 5VA) 50/60Hz 80 to 143V DC (Rated voltage. 100/110V DC, 2W)			
	Inrush current (time constant)	110V AC : 2.2A or less (Approx. 3ms) 220V AC : 4.4A or less (Approx. 3ms) 110V DC : 1.6A or less (Approx. 3ms)			

Note([10]) This product can be used under conditions of three-phase voltage unbalance, unbalanced loads, and reverse phase order.

(2) Performance

Measurement item	Measurement range / Display specification	Display and communication output		Note
		Class index	Intrinsic error ([11])([12])	
Voltage	110V AC to 110.0kV AC	0.5	±0.5%	
Current, Demand current	5.00A to 30.00kA AC	0.5	±0.5%	Demand current is for display only
Active power, Demand active power	By primary voltage and current setting	0.5	±0.5%	Demand active power is for display only.
Reactive power	By primary voltage and current setting	0.5	±0.5%	
Apparent power	By primary voltage and current setting	0.5	±0.5%	Voltage equilibrium is a requirement.
Power factor	LEAD 0.000 to 1.000 to LAG 0.000	1.5	±1.5%	Display error is % of electrical angle 90° .
Frequency	45.00 to 65.00Hz	0.5	±0.5%	
Active energy	Display : 9 digits, Unit : kWh or MWh	2.0	±2.0%	Error is % of true value
Reactive energy	Display : 9 digits, Unit : kvarh or Mvarh	2.0	±2.0%	Error is % of true value

Note([11]) The intrinsic error of the digital display is % of full scale, and the output is % of output span. This product has a larger error when directly measuring the following inverter outputs. Cycle control, SCR phase angle control, PWM

Note([12]) This is the performance of the product alone. Current sensor error is not included.

(3) Protective function

Elements	Item			specification	allowable error	Note
Reverse power (67P)	RP	Setting	Operating power	Lock, 0.2 to 30.0% (0.1% step) % of rated current	Operating power ≧5% ：Setting value ±5% Operating power 1 to 5% ：Setting value ±10% Operating power ＜1% ：rated current 5A Setting value ±5mA rated current 200A Setting value ±200mA	Voltage input ：Rated voltage Current phase ：Maximum sensitivity angle direction Maximum sensitivity angle：180° ±5°
			Return power	Operating power 75% or more (Setting value ＜1%) Operating power 90% or more (Setting value ≧1%)	—	
			Operating time	0.1 to 15.0s (0.1s step)	Setting value ±50ms	
			Return time	2 to 600s (1s step)	Setting value ±200ms	
	pre-alarm	Setting	Operating time	0.1 to 1.0s (0.1s step) Less than or equal to RP operating time	Setting value ±50ms	The operation power and return power are output only for the same communication output as the RP set value.
			Return time	Depends on RP setting	Setting value ±200ms	
	UV lock function			ON：Use, OFF：Unused	Secondary rated voltage 110V setting：60V±5% Secondary rated voltage 220V setting：120V±5% Secondary rated voltage 440V setting：240V±5%	Locked by OR of each phase. The UV lock value depends on the secondary rated voltage setting.
Under power (91L)	UP	Setting	Operating power	Lock, 1.0 to 30.0% (0.1% step) % of rated current	Operating power ≧5% ：Setting value ±5% Operating power ＜5% ：Setting value ±10%	Voltage input ：Rated voltage Current phase ：Maximum sensitivity angle direction Maximum sensitivity angle：0° ±5°
			Return power	Operating power 105% or more	—	
			Operating time	0.1 to 15.0s (0.1s step)	Setting value ±50ms	
			Return time	2 to 600s (1s step)	Setting value ±200ms	
	UV lock function			ON：Use, OFF：Unused	Secondary rated voltage 110V setting：60V±5% Secondary rated voltage 220V setting：120V±5% Secondary rated voltage 440V setting：240V±5%	Locked by OR of each phase. The UV lock value depends on the secondary rated voltage setting.
	Disconnection detection function			ON：Use, OFF：Unused	Less than 0.5% of rated current	Detected by OR of each phase

(4) Control function

① Control input

Item		Specification, Performance	
Input point		1	
Input rating		Non-voltage contact input. Contact capacity：24V DC, 10mA	
Minimum operating pulse width		100ms, continuous application possible	
Function	Relay lock input	Lock the control output (RP, UP) during stabilization during input. Output the control input status via MODBUS communication.	Settable
	State input	Output the control input status via MODBUS communication.	

② Control output

Item	Specification, Performance
Output point	2 Control output 1：Reverse power (67P), Control output 2：Under power (91L)
Output form	Optical MOS-FET relay, Normally-open contact (1a contact)
Contact capacity (13)	125V AC, 70mA (Resistance load, Inductive load) 200V DC, 70mA (Resistance load, Inductive load)
Return method	Auto (automatic return) or Hold (manual return) switchable by setting

Note(13) This product cannot trip a circuit breaker directly.
When using this product as a tripping contact, connect a relay or other device with a contact capacity suitable for the circuit breaker.

(5) Measurement function

① Elements

Measurement item	Measurement possible item (1,2,3,N：Phase, Σ: Total)			Max.	Min.	Note
	3P3W	1P3W	1P2W			
Voltage	U12, U23, U31, ULLavg	U1N, U3N, U13, ULNavg	U	○	○	Select setting of phase display. 「L1-2-3-N」, 「R-S-T-N」, 「U-V-W-N」
Current	I1, I2, I3, Iavg	I1, I3, IN, Iavg	I	○	○	
Demand current	Id1, Id2, Id3, Idavg	Id1, Id3, IdN, Idavg	Id	○	○	
Active power	ΣP		P	○	○	
Demand active power	ΣPd		Pd	○	○	
Reactive power	ΣQ		Q	○	○	Select the calculation method. $Q=UI\sin\phi$ or $Q=\sqrt{(S^2-P^2)}$
Apparent power	ΣS		S	○	○	The voltage balances of 3-phase 3-wire are conditions.
Power factor	ΣPF		PF	○	○	「----」 is displayed at the case of low input. 3E8H (1000) is output.
Frequency	f			○	○	If the input is low, it will display and output 0.
Active energy	Receiving / Transmission			—	—	Receiving / Transmission is measured individually.
Reactive energy	Receiving (LAG･LEAD) / Transmission (LAG･LEAD)			—	—	Receiving (LAG/LEAD) and Transmission (LAG/LEAD) is measured individually.

② Characteristics and Functions

Item		Specification	
Operating method		Current, Voltage	Effective value calculation method
		Demand current	Arithmetic method according with bimetallic type (Time to reach 95 % of a final constant value)
		Demand active power	Average value within the interval setting
		Active power, Active energy	Time-division multiplication method
		Reactive power, Reactive energy	Time division multiplication method (Q=UIsinφ) or the method for calculating from the power and apparent power [$Q=\sqrt{(S^2-P^2)}$]. (Selected in the setting)
		Apparent power	Calculates for voltage and current
		Power factor	Calculates for active power and reactive power
		Frequency	Zero cross cycle computing type
Measurement response	Display	1 second	
	Communication output	100ms or less (Bitrate at set to 19200bps, 38400bps)	
Interval setting	Demand current Demand active power	0 s / 5 s / 10 s / 20 s / 30 s / 40 s / 50 s / 1 min / 2 min / 3 min / 4 min / 5 min / 6 min / 7 min / 8 min / 9 min / 10 min / 15 min / 20 min / 25 min / 30 min Response time for 0-second setting is 1 second or less.	
Influence of temperature	Protection	20℃±20℃ : Within tolerance 20℃±40℃ : Within two times of tolerance	
	Measurement	23℃±10℃ : Within intrinsic error	
Power interruption backup		Maximum value, Minimum value, Integrated value, Each setting value. Maintained in nonvolatile memory.	

(6) Communication output

Item	Specification
Output point	1
Communication method	RS-485 Half-duplex two-wire asynchronous system
Protocol	Modbus RTU mode (For details of the protocol, please refer to the separate volume "Communication Specifications".)
Bit rate	4800bps / 9600bps / 19200bps / 38400bps
Modulation code	NRZ
Start bit	1 bit
Data length	8 bit
Parity	NONE / Even number / Odd number
Stop bit	1 bit / 2 bit
Transmission character	Binary
Cable length	1000m (The total extension)
Address	1 to 247 (Connection is possible to 31 sets.)
Error detection	CRC-16 ($X^{16}+X^{15}+X^2+1$)
Terminating resistor	Externally attached to the terminal section. 1W 100Ω (attached to the product)
Transmission data	Setting values, Status information, Measured values (For details on transmitted data, please refer to the separate "Communication Specifications")

(7) Other Functions

Item		Specification
Setting value confirmation function		Setting values can be confirmed without entering the screen for setting.
Test function		Outputs a known value for the communication output without applying input. Turns control output ON/OFF without applying input. Display the state of the control input on the screen. Check the state of the input wiring by the voltage phase status (positive and reverse phase) and the power value of each phase.
Display	LCD	Main-monitor : 4,1/2 digits Character height : 10mm Sub-monitor : 9 digits Character height : 5.8mm
	Backlight	White backlight Backlight can select brightness from five steps of 1 to 5. Always-on, Auto off (after 5 minutes without operating), Always-off. Setting is possible
LCD view angle		Upper and lower view angle 75° , Right and left view angle 75°
Input consumption VA	Voltage circuit	0.25VA or less (AC110V), 0.5VA or less (AC220V), 0.6VA or less (AC440V)
	Current circuit	0.05VA or less (5A), 8.0VA or less (200A) Current sensor primary

(8) Electrical strength, Mechanical Strength

Item		Specification	
Overload capacity	Voltage circuit	2 times 10 seconds (once) and 1.2 times continuation of rated voltage.	
	Current circuit	40 times 1 second (2 times, 1 minute interval) and 20 times 2 seconds (2 times, 1 minute interval) and 1.5 times 30 minutes (once) and 1.2 times continuation of rated current.	
	Power supply circuit	1.5 times 10 seconds (once) and 1.2 times continuation of rated voltage (AC power supply) 1.5 times 10 seconds (once) and 1.3 times continuation of rated voltage (DC power supply)	
Insulation resistance		Between power supply, AC input and guound. (Ground：Communication output, control output, control input)	Over 50MΩ at 500V DC
		Between power supply and AC input, control input, communication output, control output.	
		Between communication output, control output, control input.	
		Between control outputs.	
Voltage test		Between power supply, AC input and guound. (Ground：Communication output, control output, control input)	2210V AC (50/60Hz) 5 seconds
		Between power supply and AC input, control input, communication output, control output.	
		Between communication output, control output, control input.	500V AC (50/60Hz) 5 seconds
		Between control outputs.	
Impulse voltage test		Between power supply, AC input and guound. (Ground：Communication output, control output, control input)	6kV 1.2/50μs Both positive and negative polarities, for 3 times each.
		Between power supply and AC input, control input, communication output, control output.	
		Between AC input and power supply, control input, communication output, control output.	
		Between power supply terminals (Other circuits are grounded)	
		Between voltage input terminals (Other circuits are grounded)	
Vibration		IEC 60068-2-6：2007 Frequency range：10 to 55Hz, Single amplitude：0.15mm, Sweep cycle：10 times	
Impact		IEC 60068-2-27：2008 Peak acceleration：500m/s^2	

(9) Noise immunity

Item	Specification
Damped oscillatory wave immunity IEC61000-4-12	When a damping vibration waveform of peak voltage 2.5kV, frequency 1MHz ±10% is applied three times for 30 seconds, there shall be no measurement error within ±10% and no malfunction. And, do not be a communication error and stop. ・Voltage input circuit (Normal / Common) ・Current input circuit (Common) ・Power supply circuit (Normal / Common)
Square impulse immunity For B-402 Standards	When 1μs, 100ns width noise is applied repeatedly for 5 minutes, measurement error should be within 10% and no malfunction should occur. And, do not be a communication error and stop. ・Power supply circuit (Normal / Common) 1500V or more ・Voltage input circuit (Normal / Common) 1500V or more ・Current input circuit (Common) 1500V or more ・Control output circuit (Common) 1000V or more ・Control input circuit (Common) 1000V or more ・Communication output circuit (Induction) 1000V or more
Radio wave immunity	The product shall not malfunction within ±10% of error when exposed to intermittent exposure to 150MHz and 400MHz band radio waves at 5W at 1m and to cell phone and wireless LAN (2.4GHz band and 5GHz band) radio waves at 0.5m. And, do not be a communication error and stop.
Electrostatic discharge immunity IEC 61000-4-2	Perform under normal conditions of use. Measurement error should be within 10% at contact discharge 8kV and air discharge 15kV, and malfunction shall not occur. And, do not be a communication error and stop. Capacitor charge method.

(10) Configuration

Item	Specification
Case outline	72×72×85mm (W×H×D)
International protection	IP40
Material	ABS(V-0)
Terminal block	Spring pressure terminal block
Mass	Approx. 250g

(11) Environmental condition

Item	Specification
Safety	IEC 61010-1：2010 Safety requirements for electrical equipment for measurement, control, and laboratory use - Part 1: General requirements Measurement Category Ⅲ, Pollution degree 2, Maximum use voltage：300V (line to neutral voltage)
Operating temperature and humidity limits	Performance guarantee：0 to 40℃, 30 to 90% RH (Non condensing) Operating value, operating time, etc. must be within the allowable tolerance. Operation guarantee：-20 to +60℃, 30 to 90% RH (Non condensing) Operating value, operating time, etc. shall be within twice the allowable tolerance.
Storage temperature limits	-25 to +70℃

(12) Compliance standard

Item	Specification
Protection	Power protection relay JEC 2500：2010 (14)
Measurement	Direct acting indicating instrument JIS C 1102 : 2011 Transducer IEC 60688：2012, JIS C 1111：2019 Active energy IEC 62053-21：2003, JIS C 1271-1：2011 Reactive energy IEC 62053-23：2003, JIS C 1273-1：2011
Communication	TIA-485-A：2003

Note(14) Excluding requirements for contact capacity.

(13) Measuring range

Measurands	Measuring range		Low input cut	Limiter (Upper：Display, lower：Communication)
Line voltage	Secondary rating 110V	0 to 150V	Less than 20% of full scale. Phase sequence check ：Less than 2% of full scale.	101% of full scale
	Secondary rating 220V	0 to 300V		
	Secondary rating 440V	0 to 600V		
Phase voltage	Secondary rating 110V	1P3W：0 to 150V	Less than 20% of full scale	101% of full scale
Current, Demand current	0 to rated current		Less than 0.05% of the rating	201% of the rating
Active power Demand power Reactive power	- rated power to 0 to + rated power Rated power [kW] = VT ratio × CT ratio ・VT ratio：Primary rated voltage/110 ・CT ratio：Primary rated current/5		Less than ±0.05% of the rating	-201%, +201% of the rating
Apparent power	0 to + rated power Rated power [kW] = VT ratio × CT ratio ・VT ratio：Primary rated voltage/110 ・CT ratio：Primary rated current/5		Less than ±0.05% of the rating	0%, +201% of the rating
Power factor	LEAD 0 to 1 to LAG 0		"----" is displayed (out of measurement range) when it is 20% or less of the voltage full scale or 2% or less of the current rating.	LEAD 0, LAG 0 「----」is displayed of low input. Output equivalent to power factor 1.
Frequency	45 to 65Hz		0 Hz at 20% or less of the voltage full scale.	44.80Hz, 65.20Hz 0Hz for low input.
Active energy	0 to 999999999kWh (MWh) By the setting and the full load power, position and unit of the decimal point (k/M) is changed.		—	—
Reactive energy	0 to 999999999kvarh (Mvarh) By the setting and the full load power, position and unit of the decimal point (k/M) is changed.		—	—

(14) Default settings

Setting mode：Setting 1		
No.	Item	Default setting
111	Phase wire method	3P3：3 phase 3 wire
112	Phase display	1：RSTN
121	Secondary rated voltage	110V
122	Primary rated voltage	6600V
123	Current sensor	5A
124	Primary rated current	5.00A
125	Rated frequency	50.0Hz
126	W/var digit	4 digits
127	Wh/varh unit per count	0.001kWh
131	Demand current interval	0 second
132	Demand power interval	0 second
141	Reactive power calculation method	0：Q=UIsinφ
151	Address	1
152	Bit rate	19.20kbps
153	Parity	0：odd number
154	Stop bit	1
161	Backlight action	AUTO：Automatic OFF
162	Backlight luminance	3

Setting mode：Setting 2		
No.	Item	Default setting
211	Reverse power operating value	LOC：Lock
212	Reverse power operating time	0.1 seconds
213	Reverse power return method	AUTO：Automatic return
214	Reverse power return time	10 seconds
215	Reverse power UV lock	OFF
216	Reverse power pre-alarm	0.1 seconds
221	Under power operating value	LOC：Lock
222	Under power operating time	0.1 seconds
223	Under power return method	AUTO：Automatic return
224	Under power return time	10 seconds
225	Under power UV lock	OFF
226	Under power disconnection detection	OFF
231	Control input function	OFF

11. Maintenance and Inspection

11.1 Inspection

(1) Daily Inspection

Inspect the following items

① Discoloration of the LCD display or damage to the case.

② Detection of equipment abnormality.

③ No dust or dirt on the product.

(2) Periodic inspection

Although it depends on the operating conditions of the product and the installation environment, we recommend periodic inspections every 2 to 4 years if the ambient temperature, dust, and other environmental conditions are favorable.
For those that have been in operation for more than 10 years, an annual inspection is recommended.

11.2 Maintenance

When performing maintenance, pay attention to the following items.

① Do not change the wiring of the input and control power supply while the power is on.

② When it is unavoidable to inspect the outputs while power is supplied, be careful not to touch the output wiring or human body to the input or power supply.

③ When checking input, output, or power supply voltage, be sure to check the wiring diagram.

④ Wiping the nameplate with alcohol or other solvents may erase the display items.
Wipe the nameplate with a dry cloth only. The display may light up while wiping the LCD display.
This phenomenon is caused by static electricity in the filter, which naturally discharges and returns to normal if the filter is left for a while.

⑤ If the LCD surface is pressed strongly, it will be broken.
When the LCD surface is pressed hard, the filter and the LCD surface may come into contact with each other, resulting in a blotch-like appearance. This is due to changes in the ambient environment and is not an abnormality, and will return to normal during use.

⑥ When performing periodic inspections, the inspection time can be shortened by using the test mode.

⑦ Please confirm the implementation and operation procedures before implementing each mode.

11.3 Test

11.3.1 Reverse power (67P) test

(1) Test method (Single phase)

Test item	Test method	Test condition		Judgment criteria
		Operating value	Operating time	
Operating value	The voltage input is kept constant at the rated voltage, the current input is gradually increased with a phase difference of 180° from the voltage, and the current value at which the reverse power is detected is measured.	Setting value	Minimum	Operating power ≧5% ：Setting value ±5% Operating power 1 to 5% ：Setting value ±10% Operating power ＜1% ：Rated current 5A, Setting value ±5mA Rated current 200A, Setting value ±200mA
Operating time	With the voltage input constant at the rated voltage, the current input is suddenly changed from 0 to 200% of the operating value with a phase difference of 180° from the voltage, and the time from application to control output 1 being turned on is measured.	Minimum	Setting value	Setting value ±50ms
Phase characteristics	With the voltage input constant at the rated voltage and the current input constant at 200% of the operating value setting, the phase of the current relative to the voltage is gradually changed from a phase angle outside the detection range (operating phase angle of about ±90°) in the leading or lagging direction and the highest sensitivity angle at which reverse power is detected is measured. ＊See the formula below " −" is LEAD, " +" is LAG.	Minimum	Minimum	180° ±5°

$$\text{＊Maximum sensitivity angle} = \frac{\text{Operating phase angle (LEAD)} + \text{Operating phase angle (LAG)}}{2} + 180^\circ$$

<Note> When testing with a single phase, the operating value is √3 times the set value.

(2) Example of test configuration (single-phase)

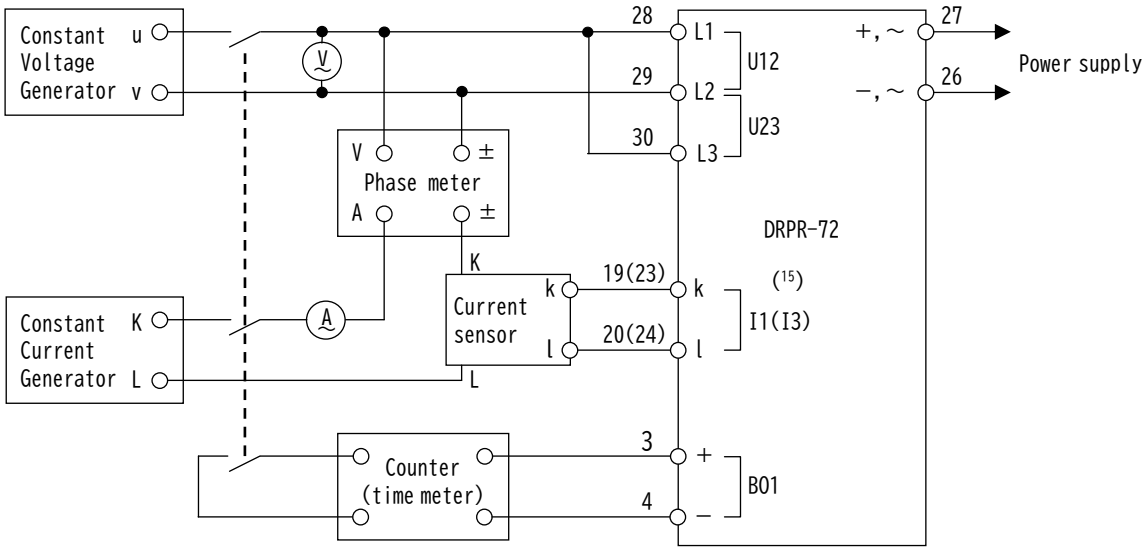

Note(15) When testing the I3 side, connect to terminals 23 (k) and 24 (l).

<Caution> Be sure to perform the test in combination with the dedicated current sensor.
Applying current input directly to the terminals without using a current sensor will cause damage.

(3) Reverse power operating power and operating current calculation method

Operating power and operating current values can be calculated as follows (constant rated voltage)
When testing single-phase, the operating current value is multiplied by √3.

<<In case of rated voltage of AC110V and current sensor of 5A>

(Method of calculating operating power value)
Operating power value [W] = √3 × 110V × 5A × Operating power setting [%] / 100

(Method of calculating operating current value)
・Three-phase input (During operation)
Operating current value [A] = 5A × Operating power setting [%] / 100

・Single-phase input (During testing)
Operating current value [A] = √3 × 5A × Operating power setting [%] / 100

Operating power value and operating current value for each operation value setting (example)

Reverse power operating value setting	Three-phase input (During operation)		Single-phase input (During testing)	
	Operating power	Operating current	Operating power	Operating current
0.2%	1.9W	0.010A	1.9W	0.017A
0.5%	4.8W	0.025A	4.8W	0.043A
1.0%	9.5W	0.050A	9.5W	0.087A
5.0%	47.6W	0.250A	47.6W	0.433A
10.0%	95.3W	0.500A	95.3W	0.866A
20.0%	190.5W	1.000A	190.5W	1.732A
30.0%	285.8W	1.500A	285.8W	2.598A

11.3.2 Under power (91L) test

(1) Test method (Single phase)

Test item	Test method	Test condition		Judgment criteria
		Operating value	Operating time	
Operating value	With the voltage input constant at the rated voltage and the phase difference from the voltage at 0° (power factor 1), gradually decrease the current input and measure the current value at which the undervoltage is detected.	Setting value	Minimum	Operating power ≧5% : Setting value ±5% Operating power <5% : Setting value ±10%
Operating time	With the voltage input constant at the rated voltage and the phase difference from the voltage at 0° (power factor 1), the current input is suddenly changed from 200% to 0% of the operating value setting, and the time from the application of the current to when the control output 2 is turned on is measured.	Maximum	Setting value	Setting value ±50ms
Phase characteristics	With the voltage input constant at the rated voltage and the current input constant at 200% of the operating value setting, gradually change the phase of the current relative to the voltage from a phase angle outside the detection range (operating phase angle of about ±0°) in the leading or lagging direction and measure the highest sensitivity angle at which undercurrent power is detected. * See the formula below " −" is LEAD, " +" is LAG.	Minimum	Minimum	0° ±5°

$$* \text{Maximum sensitivity angle} = \frac{\text{Operating phase angle (LEAD)} + \text{Operating phase angle (LAG)}}{2} + 0^\circ$$

<Note> When testing with a single phase, the operating value is √3 times the set value.

(2) Example of test configuration (single-phase)

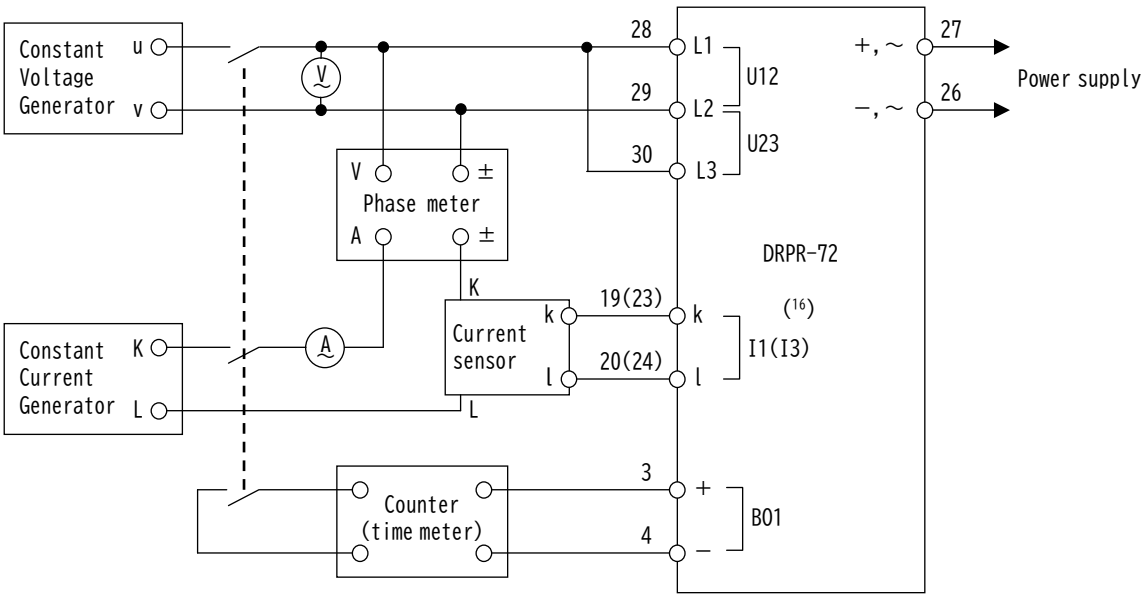

Note(16) When testing the I3 side, connect to terminals 23 (k) and 24 (l).

<Caution> When testing for power shortfall, current must be applied to all phases or the disconnection detection function may detect it, Therefore, set the disconnection detection function setting (setting no. 226) to "oFF" for the test.

<Caution> Be sure to conduct the test in combination with a dedicated current sensor.
Applying current input directly to the terminals without a current sensor may cause failure.

(3) Under power operating power and operating current calculation method

Operating power and operating current values can be calculated as follows (constant rated voltage)
When testing single-phase, the operating current value is multiplied by √3.

<<In case of rated voltage of AC110V and current sensor of 5A>

(Method of calculating operating power value)
Operating power value [W] = √3 × 110V × 5A × Operating power setting [%] / 100

(Method of calculating operating current value)
・Three-phase input (During operation)
Operating current value [A] = 5A × Operating power setting [%] / 100

・Single-phase input (During testing)
Operating current value [A] = √3 × 5A × Operating power setting [%] / 100

Operating power value and operating current value for each operation value setting (example)

Under power operating value setting	Three-phase input (During operation)		Single-phase input (During testing)	
	Operating power	Operating current	Operating power	Operating current
1.0%	9.5W	0.050A	9.5W	0.087A
5.0%	47.6W	0.250A	47.6W	0.433A
10.0%	95.3W	0.500A	95.3W	0.866A
20.0%	190.5W	1.000A	190.5W	1.732A
30.0%	285.8W	1.500A	285.8W	2.598A

12. Troubleshooting

Trouble	Probable cause	Treatment
Display is not lights	Power supply has not been applied to the terminal number 26 and 27.	Please by applying an power supply.
	Failure of equipment.	Replacement of equipment.
Backlight disappears	The display is off by the auto off function, or it is set to always off.	Please press the switch, or please check backlight operation setting.
Error of the measurement value is large	Voltage and current (primary and secondary rating) setting is wrong.	Please check the setting of current sensor and secondary voltage and primary voltage and primary current.
	Wiring is wrong.	Please check the wiring.
	Rated frequency out of range (45 to 65Hz).	This product can not be used.
Active energy and reactive energy amount of error is large. (Display, communication output)	Voltage and current (primary and secondary rating) setting is wrong.	Please check the setting of current sensor and secondary voltage and primary voltage and primary current.
	Wiring is wrong.	Please check the wiring.
Communication error occurs	The communication cable is disconnected or not properly connected (polarity, etc.).	Please refer to the confirmation of communication cable.
	Communication setting is wrong. (Address, Bit rate, Parity, Stop bit)	Please check the settings of communication output.
Control output is not output	Operation value is set to "lock".	Please check the settings of operating values.
Control output does not recover	Return method is set to "manual return".	Please check the settings of the return method.
	Return time within setting.	Please check the setting of the return time.

Appendix

■ Appendix 1-1
Rated active power table (3 phase 3 wire)

Primary rated voltage / Primary rated current	110.0kV [W]	77.00kV [W]	66.00kV [W]	33.00kV [W]	22.00kV [W]	20.00kV [W]	18.40kV [W]	16.50kV [W]	13.80kV [W]	13.20kV [W]
5A	1000 k	700.0 k	600.0 k	300.0 k	200.0 k	181.8 k	167.3 k	150.0 k	125.5 k	120.0 k
6A	1200 k	840.0 k	720.0 k	360.0 k	240.0 k	218.2 k	200.7 k	180.0 k	150.5 k	144.0 k
7.5A	1500 k	1050 k	900.0 k	450.0 k	300.0 k	272.7 k	250.9 k	225.0 k	188.2 k	180.0 k
8A	1600 k	1120 k	960.0 k	480.0 k	320.0 k	290.9 k	267.6 k	240.0 k	200.7 k	192.0 k
10A	2000 k	1400 k	1200 k	600.0 k	400.0 k	363.6 k	334.5 k	300.0 k	250.9 k	240.0 k
12A	2400 k	1680 k	1440 k	720.0 k	480.0 k	436.4 k	401.5 k	360.0 k	301.1 k	288.0 k
15A	3000 k	2100 k	1800 k	900.0 k	600.0 k	545.5 k	501.8 k	450.0 k	376.4 k	360.0 k
20A	4000 k	2800 k	2400 k	1200 k	800.0 k	727.3 k	669.1 k	600.0 k	501.8 k	480.0 k
25A	5000 k	3500 k	3000 k	1500 k	1000 k	909.1 k	836.4 k	750.0 k	627.3 k	600.0 k
30A	6000 k	4200 k	3600 k	1800 k	1200 k	1091 k	1004 k	900.0 k	752.7 k	720.0 k
40A	8000 k	5600 k	4800 k	2400 k	1600 k	1455 k	1338 k	1200 k	1004 k	960.0 k
50A	10.00 M	7000 k	6000 k	3000 k	2000 k	1818 k	1673 k	1500 k	1255 k	1200 k
60A	12.00 M	8400 k	7200 k	3600 k	2400 k	2182 k	2007 k	1800 k	1505 k	1440 k
75A	15.00 M	10.50 M	9000 k	4500 k	3000 k	2727 k	2509 k	2250 k	1882 k	1800 k
80A	16.00 M	11.20 M	9600 k	4800 k	3200 k	2909 k	2676 k	2400 k	2007 k	1920 k
100A	20.00 M	14.00 M	12.00 M	6000 k	4000 k	3636 k	3345 k	3000 k	2509 k	2400 k
120A	24.00 M	16.80 M	14.40 M	7200 k	4800 k	4364 k	4015 k	3600 k	3011 k	2880 k
150A	30.00 M	21.00 M	18.00 M	9000 k	6000 k	5455 k	5018 k	4500 k	3764 k	3600 k
200A	40.00 M	28.00 M	24.00 M	12.00 M	8000 k	7273 k	6691 k	6000 k	5018 k	4800 k
250A	50.00 M	35.00 M	30.00 M	15.00 M	10.00 M	9091 k	8364 k	7500 k	6273 k	6000 k
300A	60.00 M	42.00 M	36.00 M	18.00 M	12.00 M	10.91 M	10.04 M	9000 k	7527 k	7200 k
400A	80.00 M	56.00 M	48.00 M	24.00 M	16.00 M	14.55 M	13.38 M	12.00 M	10.04 M	9600 k
500A	100.0 M	70.00 M	60.00 M	30.00 M	20.00 M	18.18 M	16.73 M	15.00 M	12.55 M	12.00 M
600A	120.0 M	84.00 M	72.00 M	36.00 M	24.00 M	21.82 M	20.07 M	18.00 M	15.05 M	14.40 M
750A	150.0 M	105.0 M	90.00 M	45.00 M	30.00 M	27.27 M	25.09 M	22.50 M	18.82 M	18.00 M
800A	160.0 M	112.0 M	96.00 M	48.00 M	32.00 M	29.09 M	26.76 M	24.00 M	20.07 M	19.20 M
900A	180.0 M	126.0 M	108.0 M	54.00 M	36.00 M	32.73 M	30.11 M	27.00 M	22.58 M	21.60 M
1000A	200.0 M	140.0 M	120.0 M	60.00 M	40.00 M	36.36 M	33.45 M	30.00 M	25.09 M	24.00 M
1200A	240.0 M	168.0 M	144.0 M	72.00 M	48.00 M	43.64 M	40.15 M	36.00 M	30.11 M	28.80 M
1500A	300.0 M	210.0 M	180.0 M	90.00 M	60.00 M	54.55 M	50.18 M	45.00 M	37.64 M	36.00 M
1600A	320.0 M	224.0 M	192.0 M	96.00 M	64.00 M	58.18 M	53.53 M	48.00 M	40.15 M	38.40 M
1800A	360.0 M	252.0 M	216.0 M	108.0 M	72.00 M	65.45 M	60.22 M	54.00 M	45.16 M	43.20 M
2000A	400.0 M	280.0 M	240.0 M	120.0 M	80.00 M	72.73 M	66.91 M	60.00 M	50.18 M	48.00 M
2500A	500.0 M	350.0 M	300.0 M	150.0 M	100.0 M	90.91 M	83.64 M	75.00 M	62.73 M	60.00 M
3000A	600.0 M	420.0 M	360.0 M	180.0 M	120.0 M	109.1 M	100.4 M	90.00 M	75.27 M	72.00 M
3500A	700.0 M	490.0 M	420.0 M	210.0 M	140.0 M	127.3 M	117.1 M	105.0 M	87.82 M	84.00 M
4000A	800.0 M	560.0 M	480.0 M	240.0 M	160.0 M	145.5 M	133.8 M	120.0 M	100.4 M	96.00 M
4500A	900.0 M	630.0 M	540.0 M	270.0 M	180.0 M	163.6 M	150.5 M	135.0 M	112.9 M	108.0 M
5000A	1000 M	700.0 M	600.0 M	300.0 M	200.0 M	181.8 M	167.3 M	150.0 M	125.5 M	120.0 M
6000A	1200 M	840.0 M	720.0 M	360.0 M	240.0 M	218.2 M	200.7 M	180.0 M	150.5 M	144.0 M
7500A	1500 M	1050 M	900.0 M	450.0 M	300.0 M	272.7 M	250.9 M	225.0 M	188.2 M	180.0 M
8000A	1600 M	1120 M	960.0 M	480.0 M	320.0 M	290.9 M	267.6 M	240.0 M	200.7 M	192.0 M
9000A	1800 M	1260 M	1080 M	540.0 M	360.0 M	327.3 M	301.1 M	270.0 M	225.8 M	216.0 M
10000A	2000 M	1400 M	1200 M	600.0 M	400.0 M	363.6 M	334.5 M	300.0 M	250.9 M	240.0 M
12000A	2400 M	1680 M	1440 M	720.0 M	480.0 M	436.4 M	401.5 M	360.0 M	301.1 M	288.0 M
15000A	3000 M	2100 M	1800 M	900.0 M	600.0 M	545.5 M	501.8 M	450.0 M	376.4 M	360.0 M
20000A	4000 M	2800 M	2400 M	1200 M	800.0 M	727.3 M	669.1 M	600.0 M	501.8 M	480.0 M
30000A	6000 M	4200 M	3600 M	1800 M	1200 M	1091 M	1004 M	900.0 M	752.7 M	720.0 M

■ Appendix 1-2
Rated active power table (3 phase 3 wire)

Primary rated voltage / Primary rated current	11.00kV [W]	6600V [W]	3300V [W]	2200V [W]	1650V [W]	1100V [W]	990V [W]	880V [W]	690V [W]	480V [W]
5A	100.0 k	60.00 k	30.00 k	20.00 k	15.00 k	10.00 k	9000	8000	6273	4364
6A	120.0 k	72.00 k	36.00 k	24.00 k	18.00 k	12.00 k	10.80 k	9600	7527	5236
7.5A	150.0 k	90.00 k	45.00 k	30.00 k	22.50 k	15.00 k	13.50 k	12.00 k	9409	6545
8A	160.0 k	96.00 k	48.00 k	32.00 k	24.00 k	16.00 k	14.40 k	12.80 k	10.04 k	6982
10A	200.0 k	120.0 k	60.00 k	40.00 k	30.00 k	20.00 k	18.00 k	16.00 k	12.55 k	8727
12A	240.0 k	144.0 k	72.00 k	48.00 k	36.00 k	24.00 k	21.60 k	19.20 k	15.05 k	10.47 k
15A	300.0 k	180.0 k	90.00 k	60.00 k	45.00 k	30.00 k	27.00 k	24.00 k	18.82 k	13.09 k
20A	400.0 k	240.0 k	120.0 k	80.00 k	60.00 k	40.00 k	36.00 k	32.00 k	25.09 k	17.45 k
25A	500.0 k	300.0 k	150.0 k	100.0 k	75.00 k	50.00 k	45.00 k	40.00 k	31.36 k	21.82 k
30A	600.0 k	360.0 k	180.0 k	120.0 k	90.00 k	60.00 k	54.00 k	48.00 k	37.64 k	26.18 k
40A	800.0 k	480.0 k	240.0 k	160.0 k	120.0 k	80.00 k	72.00 k	64.00 k	50.18 k	34.91 k
50A	1000 k	600.0 k	300.0 k	200.0 k	150.0 k	100.0 k	90.00 k	80.00 k	62.73 k	43.64 k
60A	1200 k	720.0 k	360.0 k	240.0 k	180.0 k	120.0 k	108.0 k	96.00 k	75.27 k	52.36 k
75A	1500 k	900.0 k	450.0 k	300.0 k	225.0 k	150.0 k	135.0 k	120.0 k	94.09 k	65.45 k
80A	1600 k	960.0 k	480.0 k	320.0 k	240.0 k	160.0 k	144.0 k	128.0 k	100.4 k	69.82 k
100A	2000 k	1200 k	600.0 k	400.0 k	300.0 k	200.0 k	180.0 k	160.0 k	125.5 k	87.27 k
120A	2400 k	1440 k	720.0 k	480.0 k	360.0 k	240.0 k	216.0 k	192.0 k	150.5 k	104.7 k
150A	3000 k	1800 k	900.0 k	600.0 k	450.0 k	300.0 k	270.0 k	240.0 k	188.2 k	130.9 k
200A	4000 k	2400 k	1200 k	800.0 k	600.0 k	400.0 k	360.0 k	320.0 k	250.9 k	174.5 k
250A	5000 k	3000 k	1500 k	1000 k	750.0 k	500.0 k	450.0 k	400.0 k	313.6 k	218.2 k
300A	6000 k	3600 k	1800 k	1200 k	900.0 k	600.0 k	540.0 k	480.0 k	376.4 k	261.8 k
400A	8000 k	4800 k	2400 k	1600 k	1200 k	800.0 k	720.0 k	640.0 k	501.8 k	349.1 k
500A	10.00 M	6000 k	3000 k	2000 k	1500 k	1000 k	900.0 k	800.0 k	627.3 k	436.4 k
600A	12.00 M	7200 k	3600 k	2400 k	1800 k	1200 k	1080 k	960.0 k	752.7 k	523.6 k
750A	15.00 M	9000 k	4500 k	3000 k	2250 k	1500 k	1350 k	1200 k	940.9 k	654.5 k
800A	16.00 M	9600 k	4800 k	3200 k	2400 k	1600 k	1440 k	1280 k	1004 k	698.2 k
900A	18.00 M	10.80 M	5400 k	3600 k	2700 k	1800 k	1620 k	1440 k	1129 k	785.5 k
1000A	20.00 M	12.00 M	6000 k	4000 k	3000 k	2000 k	1800 k	1600 k	1255 k	872.7 k
1200A	24.00 M	14.40 M	7200 k	4800 k	3600 k	2400 k	2160 k	1920 k	1505 k	1047 k
1500A	30.00 M	18.00 M	9000 k	6000 k	4500 k	3000 k	2700 k	2400 k	1882 k	1309 k
1600A	32.00 M	19.20 M	9600 k	6400 k	4800 k	3200 k	2880 k	2560 k	2007 k	1396 k
1800A	36.00 M	21.60 M	10.80 M	7200 k	5400 k	3600 k	3240 k	2880 k	2258 k	1571 k
2000A	40.00 M	24.00 M	12.00 M	8000 k	6000 k	4000 k	3600 k	3200 k	2509 k	1745 k
2500A	50.00 M	30.00 M	15.00 M	10.00 M	7500 k	5000 k	4500 k	4000 k	3136 k	2182 k
3000A	60.00 M	36.00 M	18.00 M	12.00 M	9000 k	6000 k	5400 k	4800 k	3764 k	2618 k
3500A	70.00 M	42.00 M	21.00 M	14.00 M	10.50 M	7000 k	6300 k	5600 k	4391 k	3055 k
4000A	80.00 M	48.00 M	24.00 M	16.00 M	12.00 M	8000 k	7200 k	6400 k	5018 k	3491 k
4500A	90.00 M	54.00 M	27.00 M	18.00 M	13.50 M	9000 k	8100 k	7200 k	5645 k	3927 k
5000A	100.0 M	60.00 M	30.00 M	20.00 M	15.00 M	10.00 M	9000 k	8000 k	6273 k	4364 k
6000A	120.0 M	72.00 M	36.00 M	24.00 M	18.00 M	12.00 M	10.80 M	9600 k	7527 k	5236 k
7500A	150.0 M	90.00 M	45.00 M	30.00 M	22.50 M	15.00 M	13.50 M	12.00 M	9409 k	6545 k
8000A	160.0 M	96.00 M	48.00 M	32.00 M	24.00 M	16.00 M	14.40 M	12.80 M	10.04 M	6982 k
9000A	180.0 M	108.0 M	54.00 M	36.00 M	27.00 M	18.00 M	16.20 M	14.40 M	11.29 M	7855 k
10000A	200.0 M	120.0 M	60.00 M	40.00 M	30.00 M	20.00 M	18.00 M	16.00 M	12.55 M	8727 k
12000A	240.0 M	144.0 M	72.00 M	48.00 M	36.00 M	24.00 M	21.60 M	19.20 M	15.05 M	10.47 M
15000A	300.0 M	180.0 M	90.00 M	60.00 M	45.00 M	30.00 M	27.00 M	24.00 M	18.82 M	13.09 M
20000A	400.0 M	240.0 M	120.0 M	80.00 M	60.00 M	40.00 M	36.00 M	32.00 M	25.09 M	17.45 M
30000A	600.0 M	360.0 M	180.0 M	120.0 M	90.00 M	60.00 M	54.00 M	48.00 M	37.64 M	26.18 M

■ Appendix 1-3
Rated active power table (3 phase 3 wire)

Primary rated voltage / Primary rated current	460V [W]	440V [W]	415V [W]	400V [W]	380V [W]	220.0V [W]	110.0V [W]
5A	4182	4000	3773	3636	3455	2000	1000
6A	5018	4800	4527	4364	4145	2400	1200
7.5A	6273	6000	5659	5455	5182	3000	1500
8A	6691	6400	6036	5818	5527	3200	1600
10A	8364	8000	7545	7273	6909	4000	2000
12A	10.04 k	9600	9055	8727	8291	4800	2400
15A	12.55 k	12.00 k	11.32 k	10.91 k	10.36 k	6000	3000
20A	16.73 k	16.00 k	15.09 k	14.55 k	13.82 k	8000	4000
25A	20.91 k	20.00 k	18.86 k	18.18 k	17.27 k	10.00 k	5000
30A	25.09 k	24.00 k	22.64 k	21.82 k	20.73 k	12.00 k	6000
40A	33.45 k	32.00 k	30.18 k	29.09 k	27.64 k	16.00 k	8000
50A	41.82 k	40.00 k	37.73 k	36.36 k	34.55 k	20.00 k	10.00 k
60A	50.18 k	48.00 k	45.27 k	43.64 k	41.45 k	24.00 k	12.00 k
75A	62.73 k	60.00 k	56.59 k	54.55 k	51.82 k	30.00 k	15.00 k
80A	66.91 k	64.00 k	60.36 k	58.18 k	55.27 k	32.00 k	16.00 k
100A	83.64 k	80.00 k	75.45 k	72.73 k	69.09 k	40.00 k	20.00 k
120A	100.4 k	96.00 k	90.55 k	87.27 k	82.91 k	48.00 k	24.00 k
150A	125.5 k	120.0 k	113.2 k	109.1 k	103.6 k	60.00 k	30.00 k
200A	167.3 k	160.0 k	150.9 k	145.5 k	138.2 k	80.00 k	40.00 k
250A	209.1 k	200.0 k	188.6 k	181.8 k	172.7 k	100.0 k	50.00 k
300A	250.9 k	240.0 k	226.4 k	218.2 k	207.3 k	120.0 k	60.00 k
400A	334.5 k	320.0 k	301.8 k	290.9 k	276.4 k	160.0 k	80.00 k
500A	418.2 k	400.0 k	377.3 k	363.6 k	345.5 k	200.0 k	100.0 k
600A	501.8 k	480.0 k	452.7 k	436.4 k	414.5 k	240.0 k	120.0 k
750A	627.3 k	600.0 k	565.9 k	545.5 k	518.2 k	300.0 k	150.0 k
800A	669.1 k	640.0 k	603.6 k	581.8 k	552.7 k	320.0 k	160.0 k
900A	752.7 k	720.0 k	679.1 k	654.5 k	621.8 k	360.0 k	180.0 k
1000A	836.4 k	800.0 k	754.5 k	727.3 k	690.9 k	400.0 k	200.0 k
1200A	1004 k	960.0 k	905.5 k	872.7 k	829.1 k	480.0 k	240.0 k
1500A	1255 k	1200 k	1132 k	1091 k	1036 k	600.0 k	300.0 k
1600A	1338 k	1280 k	1207 k	1164 k	1105 k	640.0 k	320.0 k
1800A	1505 k	1440 k	1358 k	1309 k	1244 k	720.0 k	360.0 k
2000A	1673 k	1600 k	1509 k	1455 k	1382 k	800.0 k	400.0 k
2500A	2091 k	2000 k	1886 k	1818 k	1727 k	1000 k	500.0 k
3000A	2509 k	2400 k	2264 k	2182 k	2073 k	1200 k	600.0 k
3500A	2927 k	2800 k	2641 k	2545 k	2418 k	1400 k	700.0 k
4000A	3345 k	3200 k	3018 k	2909 k	2764 k	1600 k	800.0 k
4500A	3764 k	3600 k	3395 k	3273 k	3109 k	1800 k	900.0 k
5000A	4182 k	4000 k	3773 k	3636 k	3455 k	2000 k	1000 k
6000A	5018 k	4800 k	4527 k	4364 k	4145 k	2400 k	1200 k
7500A	6273 k	6000 k	5659 k	5455 k	5182 k	3000 k	1500 k
8000A	6691 k	6400 k	6036 k	5818 k	5527 k	3200 k	1600 k
9000A	7527 k	7200 k	6791 k	6545 k	6218 k	3600 k	1800 k
10000A	8364 k	8000 k	7545 k	7273 k	6909 k	4000 k	2000 k
12000A	10.04 M	9600 k	9055 k	8727 k	8291 k	4800 k	2400 k
15000A	12.55 M	12.00 M	11.32 M	10.91 M	10.36 M	6000 k	3000 k
20000A	16.73 M	16.00 M	15.09 M	14.55 M	13.82 M	8000 k	4000 k
30000A	25.09 M	24.00 M	22.64 M	21.82 M	20.73 M	12.00 M	6000 k

■ Appendix 2
Rated active power table (1 phase 3 wire)

Primary rated voltage / Primary rated current	110.0V [W]
5A	1000
6A	1200
7.5A	1500
8A	1600
10A	2000
12A	2400
15A	3000
20A	4000
25A	5000
30A	6000
40A	8000
50A	10.00 k
60A	12.00 k
75A	15.00 k
80A	16.00 k
100A	20.00 k
120A	24.00 k
150A	30.00 k
200A	40.00 k
250A	50.00 k
300A	60.00 k
400A	80.00 k
500A	100.0 k
600A	120.0 k
750A	150.0 k
800A	160.0 k
900A	180.0 k
1000A	200.0 k
1200A	240.0 k
1500A	300.0 k
1600A	320.0 k
1800A	360.0 k
2000A	400.0 k
2500A	500.0 k
3000A	600.0 k
3500A	700.0 k
4000A	800.0 k
4500A	900.0 k
5000A	1000 k
6000A	1200 k
7500A	1500 k
8000A	1600 k
9000A	1800 k
10000A	2000 k
12000A	2400 k
15000A	3000 k
20000A	4000 k
30000A	6000 k

■ Appendix 3-1
Rated active power table (1 phase 2 wire)

Primary rated voltage / Primary rated current	110.0kV [W]	77.00kV [W]	66.00kV [W]	33.00kV [W]	22.00kV [W]	20.00kV [W]	18.40kV [W]	16.50kV [W]	13.80kV [W]	13.20kV [W]
5A	500.0 k	350.0 k	300.0 k	150.0 k	100.0 k	90.91 k	83.64 k	75.00 k	62.73 k	60.00 k
6A	600.0 k	420.0 k	360.0 k	180.0 k	120.0 k	109.1 k	100.4 k	90.00 k	75.27 k	72.00 k
7.5A	750.0 k	525.0 k	450.0 k	225.0 k	150.0 k	136.4 k	125.5 k	112.5 k	94.09 k	90.00 k
8A	800.0 k	560.0 k	480.0 k	240.0 k	160.0 k	145.5 k	133.8 k	120.0 k	100.4 k	96.00 k
10A	1000 k	700.0 k	600.0 k	300.0 k	200.0 k	181.8 k	167.3 k	150.0 k	125.5 k	120.0 k
12A	1200 k	840.0 k	720.0 k	360.0 k	240.0 k	218.2 k	200.7 k	180.0 k	150.5 k	144.0 k
15A	1500 k	1050 k	900.0 k	450.0 k	300.0 k	272.7 k	250.9 k	225.0 k	188.2 k	180.0 k
20A	2000 k	1400 k	1200 k	600.0 k	400.0 k	363.6 k	334.5 k	300.0 k	250.9 k	240.0 k
25A	2500 k	1750 k	1500 k	750.0 k	500.0 k	454.5 k	418.2 k	375.0 k	313.6 k	300.0 k
30A	3000 k	2100 k	1800 k	900.0 k	600.0 k	545.5 k	501.8 k	450.0 k	376.4 k	360.0 k
40A	4000 k	2800 k	2400 k	1200 k	800.0 k	727.3 k	669.1 k	600.0 k	501.8 k	480.0 k
50A	5000 k	3500 k	3000 k	1500 k	1000 k	909.1 k	836.4 k	750.0 k	627.3 k	600.0 k
60A	6000 k	4200 k	3600 k	1800 k	1200 k	1091 k	1004 k	900.0 k	752.7 k	720.0 k
75A	7500 k	5250 k	4500 k	2250 k	1500 k	1364 k	1255 k	1125 k	940.9 k	900.0 k
80A	8000 k	5600 k	4800 k	2400 k	1600 k	1455 k	1338 k	1200 k	1004 k	960.0 k
100A	10.00 M	7000 k	6000 k	3000 k	2000 k	1818 k	1673 k	1500 k	1255 k	1200 k
120A	12.00 M	8400 k	7200 k	3600 k	2400 k	2182 k	2007 k	1800 k	1505 k	1440 k
150A	15.00 M	10.50 M	9000 k	4500 k	3000 k	2727 k	2509 k	2250 k	1882 k	1800 k
200A	20.00 M	14.00 M	12.00 M	6000 k	4000 k	3636 k	3345 k	3000 k	2509 k	2400 k
250A	25.00 M	17.50 M	15.00 M	7500 k	5000 k	4545 k	4182 k	3750 k	3136 k	3000 k
300A	30.00 M	21.00 M	18.00 M	9000 k	6000 k	5455 k	5018 k	4500 k	3764 k	3600 k
400A	40.00 M	28.00 M	24.00 M	12.00 M	8000 k	7273 k	6691 k	6000 k	5018 k	4800 k
500A	50.00 M	35.00 M	30.00 M	15.00 M	10.00 M	9091 k	8364 k	7500 k	6273 k	6000 k
600A	60.00 M	42.00 M	36.00 M	18.00 M	12.00 M	10.91 M	10.04 M	9000 k	7527 k	7200 k
750A	75.00 M	52.50 M	45.00 M	22.50 M	15.00 M	13.64 M	12.55 M	11.25 M	9409 k	9000 k
800A	80.00 M	56.00 M	48.00 M	24.00 M	16.00 M	14.55 M	13.38 M	12.00 M	10.04 M	9600 k
900A	90.00 M	63.00 M	54.00 M	27.00 M	18.00 M	16.36 M	15.05 M	13.50 M	11.29 M	10.80 M
1000A	100.0 M	70.00 M	60.00 M	30.00 M	20.00 M	18.18 M	16.73 M	15.00 M	12.55 M	12.00 M
1200A	120.0 M	84.00 M	72.00 M	36.00 M	24.00 M	21.82 M	20.07 M	18.00 M	15.05 M	14.40 M
1500A	150.0 M	105.0 M	90.00 M	45.00 M	30.00 M	27.27 M	25.09 M	22.50 M	18.82 M	18.00 M
1600A	160.0 M	112.0 M	96.00 M	48.00 M	32.00 M	29.09 M	26.76 M	24.00 M	20.07 M	19.20 M
1800A	180.0 M	126.0 M	108.0 M	54.00 M	36.00 M	32.73 M	30.11 M	27.00 M	22.58 M	21.60 M
2000A	200.0 M	140.0 M	120.0 M	60.00 M	40.00 M	36.36 M	33.45 M	30.00 M	25.09 M	24.00 M
2500A	250.0 M	175.0 M	150.0 M	75.00 M	50.00 M	45.45 M	41.82 M	37.50 M	31.36 M	30.00 M
3000A	300.0 M	210.0 M	180.0 M	90.00 M	60.00 M	54.55 M	50.18 M	45.00 M	37.64 M	36.00 M
3500A	350.0 M	245.0 M	210.0 M	105.0 M	70.00 M	63.64 M	58.55 M	52.50 M	43.91 M	42.00 M
4000A	400.0 M	280.0 M	240.0 M	120.0 M	80.00 M	72.73 M	66.91 M	60.00 M	50.18 M	48.00 M
4500A	450.0 M	315.0 M	270.0 M	135.0 M	90.00 M	81.82 M	75.27 M	67.50 M	56.45 M	54.00 M
5000A	500.0 M	350.0 M	300.0 M	150.0 M	100.0 M	90.91 M	83.64 M	75.00 M	62.73 M	60.00 M
6000A	600.0 M	420.0 M	360.0 M	180.0 M	120.0 M	109.1 M	100.4 M	90.00 M	75.27 M	72.00 M
7500A	750.0 M	525.0 M	450.0 M	225.0 M	150.0 M	136.4 M	125.5 M	112.5 M	94.09 M	90.00 M
8000A	800.0 M	560.0 M	480.0 M	240.0 M	160.0 M	145.5 M	133.8 M	120.0 M	100.4 M	96.00 M
9000A	900.0 M	630.0 M	540.0 M	270.0 M	180.0 M	163.6 M	150.5 M	135.0 M	112.9 M	108.0 M
10000A	1000 M	700.0 M	600.0 M	300.0 M	200.0 M	181.8 M	167.3 M	150.0 M	125.5 M	120.0 M
12000A	1200 M	840.0 M	720.0 M	360.0 M	240.0 M	218.2 M	200.7 M	180.0 M	150.5 M	144.0 M
15000A	1500 M	1050 M	900.0 M	450.0 M	300.0 M	272.7 M	250.9 M	225.0 M	188.2 M	180.0 M
20000A	2000 M	1400 M	1200 M	600.0 M	400.0 M	363.6 M	334.5 M	300.0 M	250.9 M	240.0 M
30000A	3000 M	2100 M	1800 M	900.0 M	600.0 M	545.5 M	501.8 M	450.0 M	376.4 M	360.0 M

■ Appendix 3-2
Rated active power table (1 phase 2 wire)

Primary rated voltage / Primary rated current	11.00kV [W]	6600V [W]	3300V [W]	2200V [W]	1650V [W]	1100V [W]	990V [W]	880V [W]	690V [W]	480V [W]
5A	50.00 k	30.00 k	15.00 k	10.00 k	7500	5000	4500	4000	3136	2182
6A	60.00 k	36.00 k	18.00 k	12.00 k	9000	6000	5400	4800	3764	2618
7.5A	75.00 k	45.00 k	22.50 k	15.00 k	11.25 k	7500	6750	6000	4705	3273
8A	80.00 k	48.00 k	24.00 k	16.00 k	12.00 k	8000	7200	6400	5018	3491
10A	100.0 k	60.00 k	30.00 k	20.00 k	15.00 k	10.00 k	9000	8000	6273	4364
12A	120.0 k	72.00 k	36.00 k	24.00 k	18.00 k	12.00 k	10.80 k	9600	7527	5236
15A	150.0 k	90.00 k	45.00 k	30.00 k	22.50 k	15.00 k	13.50 k	12.00 k	9409	6545
20A	200.0 k	120.0 k	60.00 k	40.00 k	30.00 k	20.00 k	18.00 k	16.00 k	12.55 k	8727
25A	250.0 k	150.0 k	75.00 k	50.00 k	37.50 k	25.00 k	22.50 k	20.00 k	15.68 k	10.91 k
30A	300.0 k	180.0 k	90.00 k	60.00 k	45.00 k	30.00 k	27.00 k	24.00 k	18.82 k	13.09 k
40A	400.0 k	240.0 k	120.0 k	80.00 k	60.00 k	40.00 k	36.00 k	32.00 k	25.09 k	17.45 k
50A	500.0 k	300.0 k	150.0 k	100.0 k	75.00 k	50.00 k	45.00 k	40.00 k	31.36 k	21.82 k
60A	600.0 k	360.0 k	180.0 k	120.0 k	90.00 k	60.00 k	54.00 k	48.00 k	37.64 k	26.18 k
75A	750.0 k	450.0 k	225.0 k	150.0 k	112.5 k	75.00 k	67.50 k	60.00 k	47.05 k	32.73 k
80A	800.0 k	480.0 k	240.0 k	160.0 k	120.0 k	80.00 k	72.00 k	64.00 k	50.18 k	34.91 k
100A	1000 k	600.0 k	300.0 k	200.0 k	150.0 k	100.0 k	90.00 k	80.00 k	62.73 k	43.64 k
120A	1200 k	720.0 k	360.0 k	240.0 k	180.0 k	120.0 k	108.0 k	96.00 k	75.27 k	52.36 k
150A	1500 k	900.0 k	450.0 k	300.0 k	225.0 k	150.0 k	135.0 k	120.0 k	94.09 k	65.45 k
200A	2000 k	1200 k	600.0 k	400.0 k	300.0 k	200.0 k	180.0 k	160.0 k	125.5 k	87.27 k
250A	2500 k	1500 k	750.0 k	500.0 k	375.0 k	250.0 k	225.0 k	200.0 k	156.8 k	109.1 k
300A	3000 k	1800 k	900.0 k	600.0 k	450.0 k	300.0 k	270.0 k	240.0 k	188.2 k	130.9 k
400A	4000 k	2400 k	1200 k	800.0 k	600.0 k	400.0 k	360.0 k	320.0 k	250.9 k	174.5 k
500A	5000 k	3000 k	1500 k	1000 k	750.0 k	500.0 k	450.0 k	400.0 k	313.6 k	218.2 k
600A	6000 k	3600 k	1800 k	1200 k	900.0 k	600.0 k	540.0 k	480.0 k	376.4 k	261.8 k
750A	7500 k	4500 k	2250 k	1500 k	1125 k	750.0 k	675.0 k	600.0 k	470.5 k	327.3 k
800A	8000 k	4800 k	2400 k	1600 k	1200 k	800.0 k	720.0 k	640.0 k	501.8 k	349.1 k
900A	9000 k	5400 k	2700 k	1800 k	1350 k	900.0 k	810.0 k	720.0 k	564.5 k	392.7 k
1000A	10.00 M	6000 k	3000 k	2000 k	1500 k	1000 k	900.0 k	800.0 k	627.3 k	436.4 k
1200A	12.00 M	7200 k	3600 k	2400 k	1800 k	1200 k	1080 k	960.0 k	752.7 k	523.6 k
1500A	15.00 M	9000 k	4500 k	3000 k	2250 k	1500 k	1350 k	1200 k	940.9 k	654.5 k
1600A	16.00 M	9600 k	4800 k	3200 k	2400 k	1600 k	1440 k	1280 k	1004 k	698.2 k
1800A	18.00 M	10.80 M	5400 k	3600 k	2700 k	1800 k	1620 k	1440 k	1129 k	785.5 k
2000A	20.00 M	12.00 M	6000 k	4000 k	3000 k	2000 k	1800 k	1600 k	1255 k	872.7 k
2500A	25.00 M	15.00 M	7500 k	5000 k	3750 k	2500 k	2250 k	2000 k	1568 k	1091 k
3000A	30.00 M	18.00 M	9000 k	6000 k	4500 k	3000 k	2700 k	2400 k	1882 k	1309 k
3500A	35.00 M	21.00 M	10.50 M	7000 k	5250 k	3500 k	3150 k	2800 k	2195 k	1527 k
4000A	40.00 M	24.00 M	12.00 M	8000 k	6000 k	4000 k	3600 k	3200 k	2509 k	1745 k
4500A	45.00 M	27.00 M	13.50 M	9000 k	6750 k	4500 k	4050 k	3600 k	2823 k	1964 k
5000A	50.00 M	30.00 M	15.00 M	10.00 M	7500 k	5000 k	4500 k	4000 k	3136 k	2182 k
6000A	60.00 M	36.00 M	18.00 M	12.00 M	9000 k	6000 k	5400 k	4800 k	3764 k	2618 k
7500A	75.00 M	45.00 M	22.50 M	15.00 M	11.25 M	7500 k	6750 k	6000 k	4705 k	3273 k
8000A	80.00 M	48.00 M	24.00 M	16.00 M	12.00 M	8000 k	7200 k	6400 k	5018 k	3491 k
9000A	90.00 M	54.00 M	27.00 M	18.00 M	13.50 M	9000 k	8100 k	7200 k	5645 k	3927 k
10000A	100.0 M	60.00 M	30.00 M	20.00 M	15.00 M	10.00 M	9000 k	8000 k	6273 k	4364 k
12000A	120.0 M	72.00 M	36.00 M	24.00 M	18.00 M	12.00 M	10.80 M	9600 k	7527 k	5236 k
15000A	150.0 M	90.00 M	45.00 M	30.00 M	22.50 M	15.00 M	13.50 M	12.00 M	9409 k	6545 k
20000A	200.0 M	120.0 M	60.00 M	40.00 M	30.00 M	20.00 M	18.00 M	16.00 M	12.55 M	8727 k
30000A	300.0 M	180.0 M	90.00 M	60.00 M	45.00 M	30.00 M	27.00 M	24.00 M	18.82 M	13.09 M

■ Appendix 3-3
Rated active power table (1 phase 2 wire)

Primary rated voltage / Primary rated current	460V [W]	440V [W]	415V [W]	400V [W]	380V [W]	220.0V [W]	110.0V [W]
5A	2091	2000	1886	1818	1727	1000	500
6A	2509	2400	2264	2182	2073	1200	600
7.5A	3136	3000	2830	2727	2591	1500	750
8A	3345	3200	3018	2909	2764	1600	800
10A	4182	4000	3773	3636	3455	2000	1000
12A	5018	4800	4527	4364	4145	2400	1200
15A	6273	6000	5659	5455	5182	3000	1500
20A	8364	8000	7545	7273	6909	4000	2000
25A	10.45 k	10.00 k	9432	9091	8636	5000	2500
30A	12.55 k	12.00 k	11.32 k	10.91 k	10.36 k	6000	3000
40A	16.73 k	16.00 k	15.09 k	14.55 k	13.82 k	8000	4000
50A	20.91 k	20.00 k	18.86 k	18.18 k	17.27 k	10.00 k	5000
60A	25.09 k	24.00 k	22.64 k	21.82 k	20.73 k	12.00 k	6000
75A	31.36 k	30.00 k	28.30 k	27.27 k	25.91 k	15.00 k	7500
80A	33.45 k	32.00 k	30.18 k	29.09 k	27.64 k	16.00 k	8000
100A	41.82 k	40.00 k	37.73 k	36.36 k	34.55 k	20.00 k	10.00 k
120A	50.18 k	48.00 k	45.27 k	43.64 k	41.45 k	24.00 k	12.00 k
150A	62.73 k	60.00 k	56.59 k	54.55 k	51.82 k	30.00 k	15.00 k
200A	83.64 k	80.00 k	75.45 k	72.73 k	69.09 k	40.00 k	20.00 k
250A	104.5 k	100.0 k	94.32 k	90.91 k	86.36 k	50.00 k	25.00 k
300A	125.5 k	120.0 k	113.2 k	109.1 k	103.6 k	60.00 k	30.00 k
400A	167.3 k	160.0 k	150.9 k	145.5 k	138.2 k	80.00 k	40.00 k
500A	209.1 k	200.0 k	188.6 k	181.8 k	172.7 k	100.0 k	50.00 k
600A	250.9 k	240.0 k	226.4 k	218.2 k	207.3 k	120.0 k	60.00 k
750A	313.6 k	300.0 k	283.0 k	272.7 k	259.1 k	150.0 k	75.00 k
800A	334.5 k	320.0 k	301.8 k	290.9 k	276.4 k	160.0 k	80.00 k
900A	376.4 k	360.0 k	339.5 k	327.3 k	310.9 k	180.0 k	90.00 k
1000A	418.2 k	400.0 k	377.3 k	363.6 k	345.5 k	200.0 k	100.0 k
1200A	501.8 k	480.0 k	452.7 k	436.4 k	414.5 k	240.0 k	120.0 k
1500A	627.3 k	600.0 k	565.9 k	545.5 k	518.2 k	300.0 k	150.0 k
1600A	669.1 k	640.0 k	603.6 k	581.8 k	552.7 k	320.0 k	160.0 k
1800A	752.7 k	720.0 k	679.1 k	654.5 k	621.8 k	360.0 k	180.0 k
2000A	836.4 k	800.0 k	754.5 k	727.3 k	690.9 k	400.0 k	200.0 k
2500A	1045 k	1000 k	943.2 k	909.1 k	863.6 k	500.0 k	250.0 k
3000A	1255 k	1200 k	1132 k	1091 k	1036 k	600.0 k	300.0 k
3500A	1464 k	1400 k	1320 k	1273 k	1209 k	700.0 k	350.0 k
4000A	1673 k	1600 k	1509 k	1455 k	1382 k	800.0 k	400.0 k
4500A	1882 k	1800 k	1698 k	1636 k	1555 k	900.0 k	450.0 k
5000A	2091 k	2000 k	1886 k	1818 k	1727 k	1000 k	500.0 k
6000A	2509 k	2400 k	2264 k	2182 k	2073 k	1200 k	600.0 k
7500A	3136 k	3000 k	2830 k	2727 k	2591 k	1500 k	750.0 k
8000A	3345 k	3200 k	3018 k	2909 k	2764 k	1600 k	800.0 k
9000A	3764 k	3600 k	3395 k	3273 k	3109 k	1800 k	900.0 k
10000A	4182 k	4000 k	3773 k	3636 k	3455 k	2000 k	1000 k
12000A	5018 k	4800 k	4527 k	4364 k	4145 k	2400 k	1200 k
15000A	6273 k	6000 k	5659 k	5455 k	5182 k	3000 k	1500 k
20000A	8364 k	8000 k	7545 k	7273 k	6909 k	4000 k	2000 k
30000A	12.55 M	12.00 M	11.32 M	10.91 M	10.36 M	6000 k	3000 k

DAIICHI ELECTRONICS CO., LTD.

Tokyo Office : 11-13, Hitotsuya 1-chome, Adachi-ku, Tokyo, 121-8639, JAPAN.
TEL：+81-3-3885-2411 , FAX：+81-3-3858-3966

Kyoto Office : 1-19, Ichinobe-Nishikawahara, Jyoyou-shi, Kyoto, 610-0114, JAPAN.
TEL：+81-774-55-1391 , FAX：+81-774-54-1353

Revision B, DATE：August 26, 2025